National Aeronautics and Space Administration

Landsat Data Continuity Mission Instrument Overview

Philip W Dabney - NASA LDCM Instrument Scientist

James R Irons - NASA LDCM Project Scientist

Brian L Markham - NASA LDCM Calibration/Validation Scientist

Dennis C Reuter - NASA TIRS Instrument Scientist

James C Storey - USGS/SAIC LDCM Geospatial Imaging Scientist

….plus a cast of hundreds….

February 13, 2013

LDCM Science Team Meeting

data continuity mission

LDCM
LANDSAT

NASA GSFC / USGS EROS

www.nasa.gov www.usgs.gov

Outline

- Basic Band Requirements
- Several Driving Requirements
- Instrument Overviews:
  - Operational Land Imager (OLI)
  - Thermal Infrared Sensor (TIRS)

OLI & ETM+ Spectral Bands

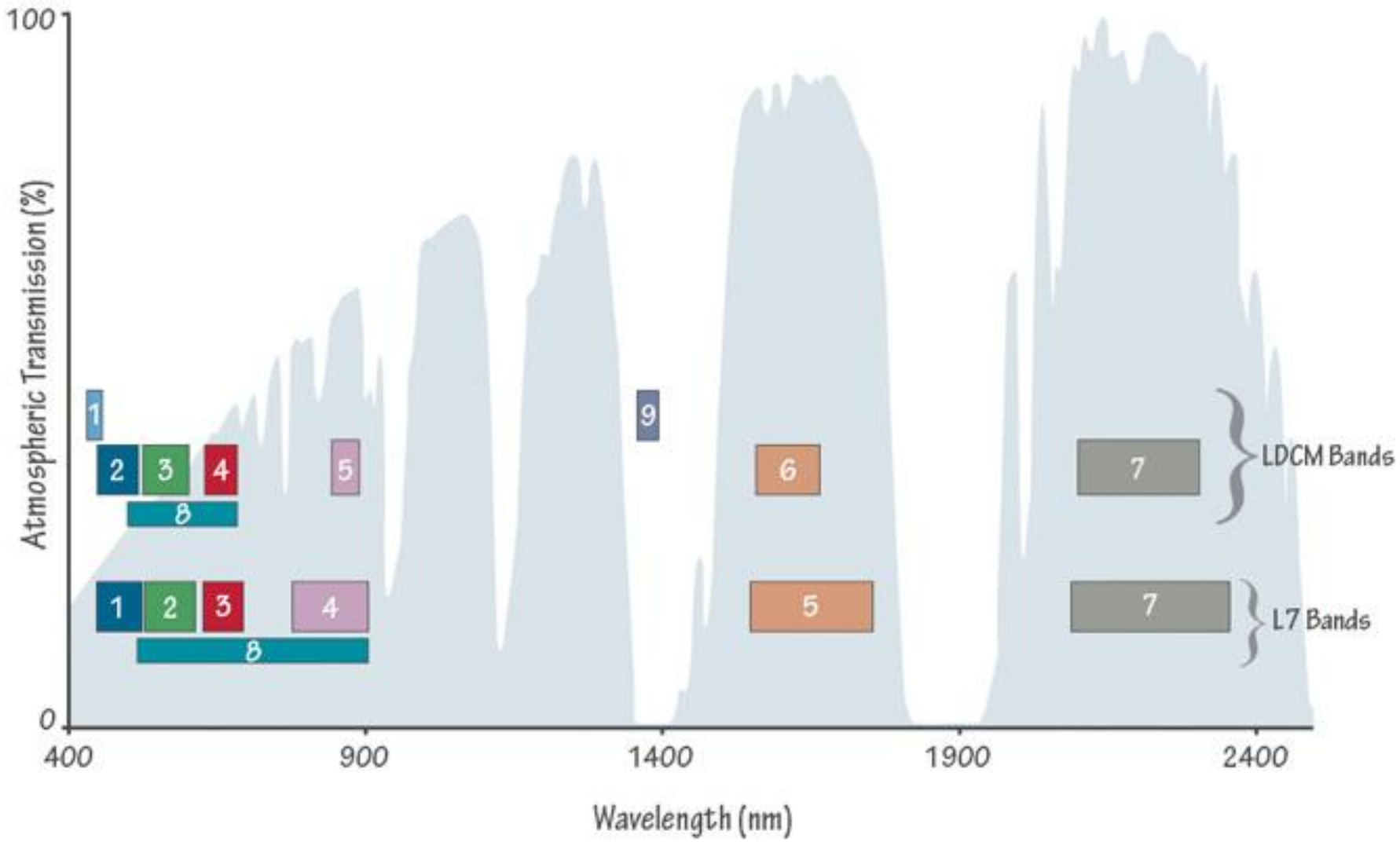

LDCM and ETM+ Spectral Bands

L7 ETM+ Bands				LDCM OLI Band Requirements			
	GSD	*"color"*	*min-max (nm)*	*GSD*	*"color"*	*min-max (nm)*	
				30 m	**Coastal/Aerosol**	0.433 - 0.453	**Band 1**
Band 1	**30 m**	**Blue**	0.450 - 0.515	**30 m**	**Blue**	0.450 - 0.515	**Band 2**
Band 2	**30 m**	**Green**	0.525 - 0.605	**30 m**	**Green**	0.525 - 0.600	**Band 3**
Band 3	**30 m**	**Red**	0.630 - 0.690	**30 m**	**Red**	0.630 - 0.680	**Band 4**
Band 4	**30 m**	**Near-IR**	0.775 - 0.900	**30 m**	**Near-IR**	0.845 - 0.885	**Band 5**
Band 5	**30 m**	**SWIR-1**	1.550 - 1.750	**30 m**	**SWIR-1**	1.560 - 1.660	**Band 6**
Band 6	**60 m**	**LWIR**	10.00 - 12.50	**N/A**			
Band 7	**30 m**	**SWIR-2**	2.090 - 2.350	**30 m**	**SWIR-2**	2.100 - 2.300	**Band 7**
Band 8	**15 m**	**Pan**	0.520 - 0.900	**15 m**	**Pan**	0.500 - 0.680	**Band 8**
				30 m	**Cirrus**	1.360 - 1.390	**Band 9**

OLI and ETM+ Radiometric Performance

Signal-to-Noise Ratios (SNR)

	$L_{typical}$ SNR		L_{high} SNR	
Band	ETM+ Performance	OLI Requirements	ETM+ Performance	OLI Requirements
Coastal/Aerosol	N/A	130	N/A	290
Blue	40	130	140	360
Green	40	100	190	390
Red	30	90	140	340
NIR	35	90	250	460
SWIR 1	35	100	190	540
SWIR 2	30	100	140	510
Pan	16	80	90	230
Cirrus	N/A	50	N/A	N/A

TIRS and ETM+ TIR Spectral Bands

L7 ETM+ Thermal Band				LDCM TIRS Band Requirements			
	GSD	*"color"*	*min-max (nm)*	*GSD*	*"color"*	*min-max (nm)*	
Band 6	**60 m**	**LWIR**	10.00 - 12.50	**100 m**	**LWIR**	10.30 – 11.30	**Band 10**
				100 m	**LWIR**	11.50 – 12.50	**Band 11**

- 120 m resolution TIRS requirement deemed sufficient to resolve most center-pivot irrigation fields in U.S. West - typically 400 to 800 m in diameter – TIRS design provides for 100 m resolution
- Landsat 4 & 5 TM's provided 120 m thermal images for a single thermal band
- Landsat 7 ETM+ provided 60 m thermal images for a single thermal band
- A two band instrument will enable atmospheric correction so that more accurate surface temperatures can be derived.

Several Driving Requirements

- Nadir Swath Width >185 km; 15/30/100 m GSD; @ S/C altitude of 705 km
- Wide spectral coverage (Deep Blue – NIR, SWIR, TIR)
- Geo-registration & Accuracy
  - Band-to-band: 4.5 meters or less
    - in the line and sample directions at the 90% confidence level
  - Geodetic Accuracy: Absolute 65 m / Relative 25 m
  - Geometric Accuracy: 12 m
- **Signal to Noise Ratio (SNR)** & Dynamic Range (DNR)
- Radiometric Accuracy
  - *Calibration stability*
  - Stray light (diffused scatter and ghosting)
- Uniformity
  - Spatial (Distortion/GSD, Edge Response)
  - Spectral
  - Radiometric (Coherent noise, pixel-to-pixel stability & non-linearity, spectral uniformity)

OLI represents a generational change in Landsat technology

Courtesy of BATC

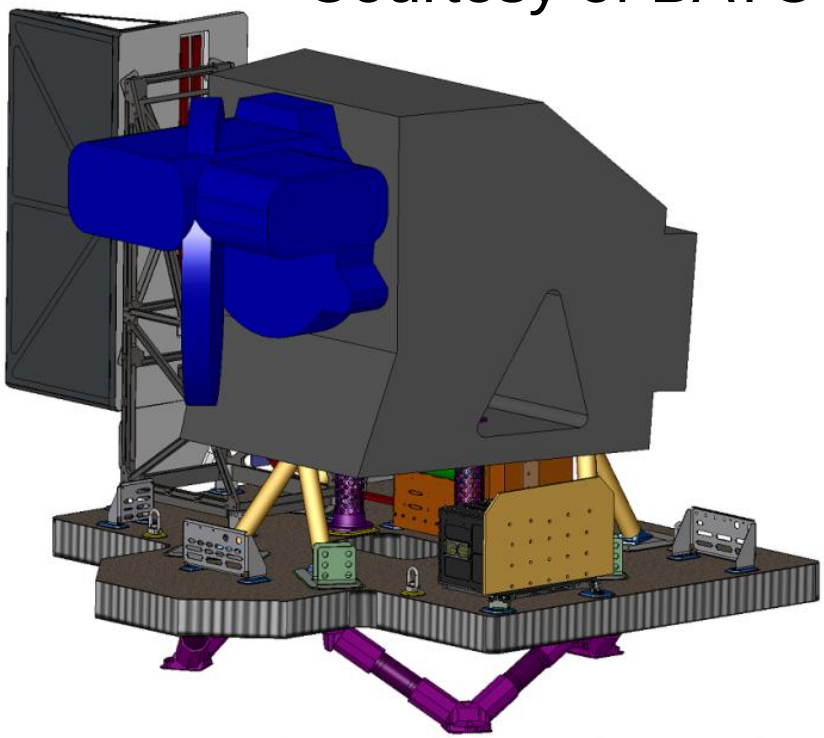

- Whiskbroom imager
- Obscured telescope
- 1020 cm^2 aperture
- 8 bits transmitted to ground (gain switching)
- VIS/SWIR and IR

- Pushbroom Imager
- Unobscured telescope
- 143 cm^2 aperture
- 12 bits transmitted to ground
- OLI is VIS/SWIR only (TIRS does IR)

ETM+ Scan Footprint

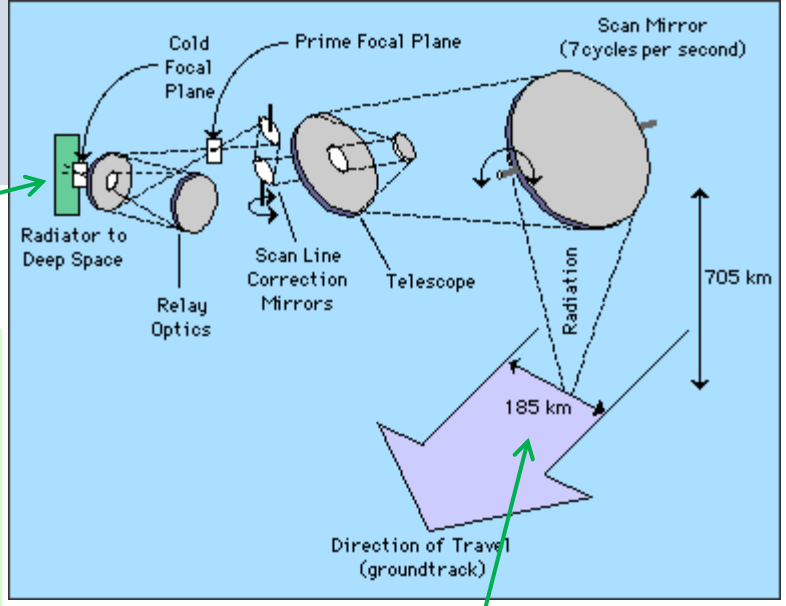

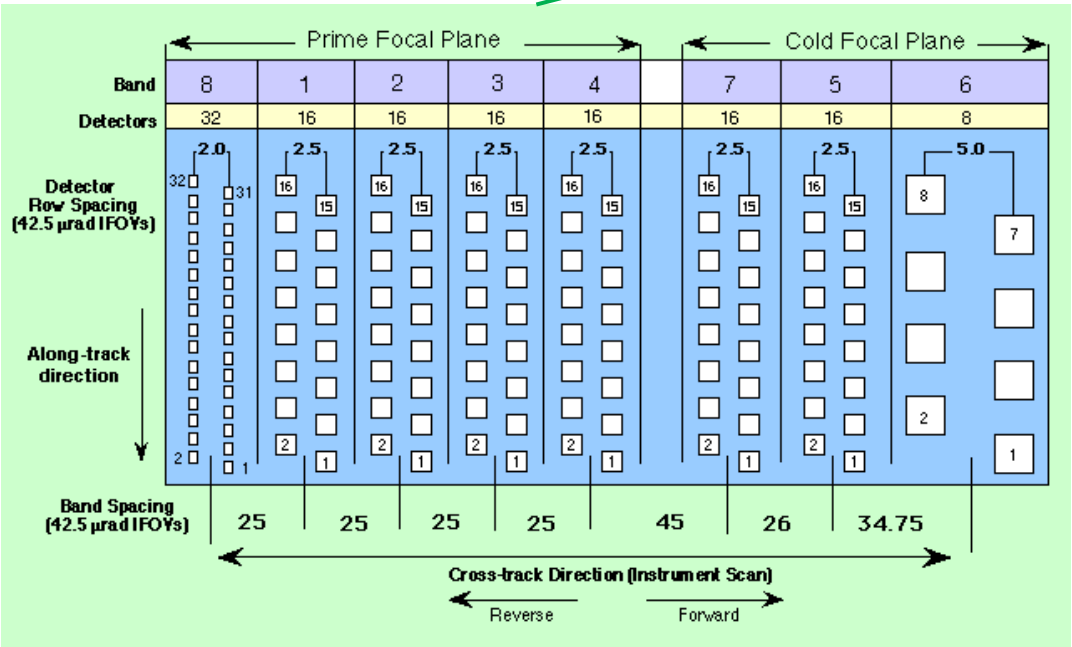

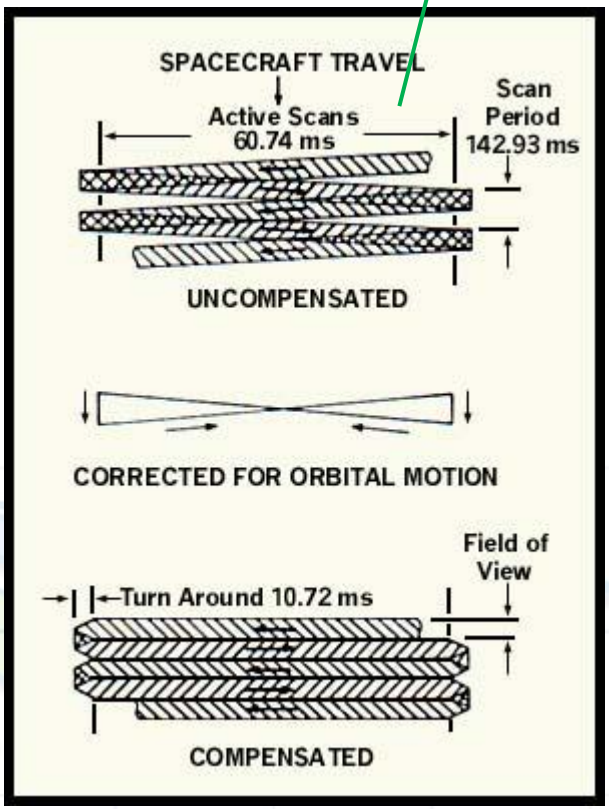

Operational Land Imager (OLI)

- Collects 400 scenes per day using pushbroom design
  - Coincident with TIRS data collection
- Covers a 185 km swath
- Collects data for nine shortwave spectral bands
  - Provides continuity with seven TM and ETM+ shortwave spectral bands
  - Adds two new bands
- Provides a 30 m spatial resolution
  - 15 m panchromatic band
- Collects calibration data
  - Internal cal lamps, shutter collects, solar panel, lunar views, vicarious field campaigns

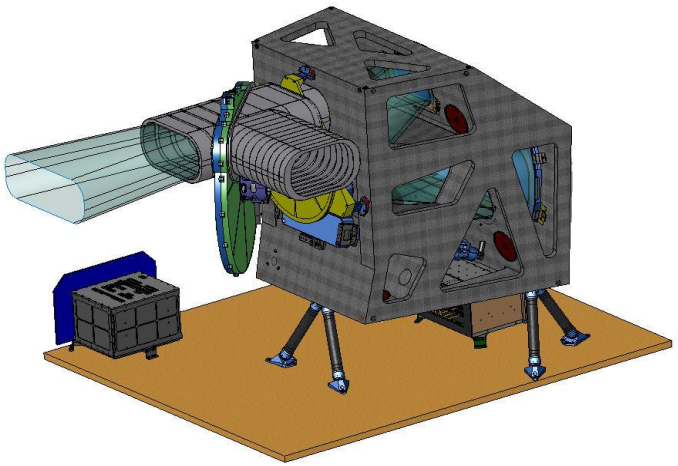

Courtesy of BATC

OLI is a fairly simple instrument
(slide created and provided by Ed Knight of BATC.)

- Pushbroom VIS/SWIR sensor
- Four-mirror telescope with front aperture stop
- FPA consisting of 14 sensor chip assemblies, passively cooled
- On-board calibration with both lamps and full aperture diffusers

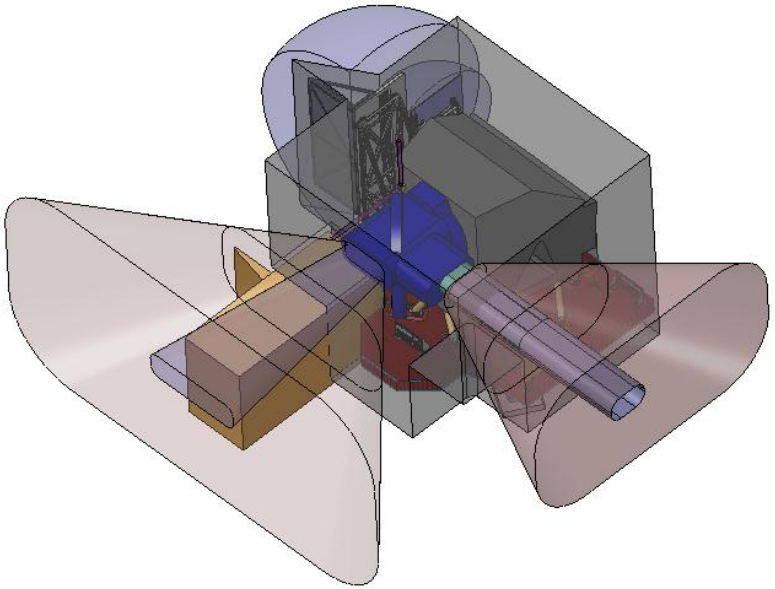

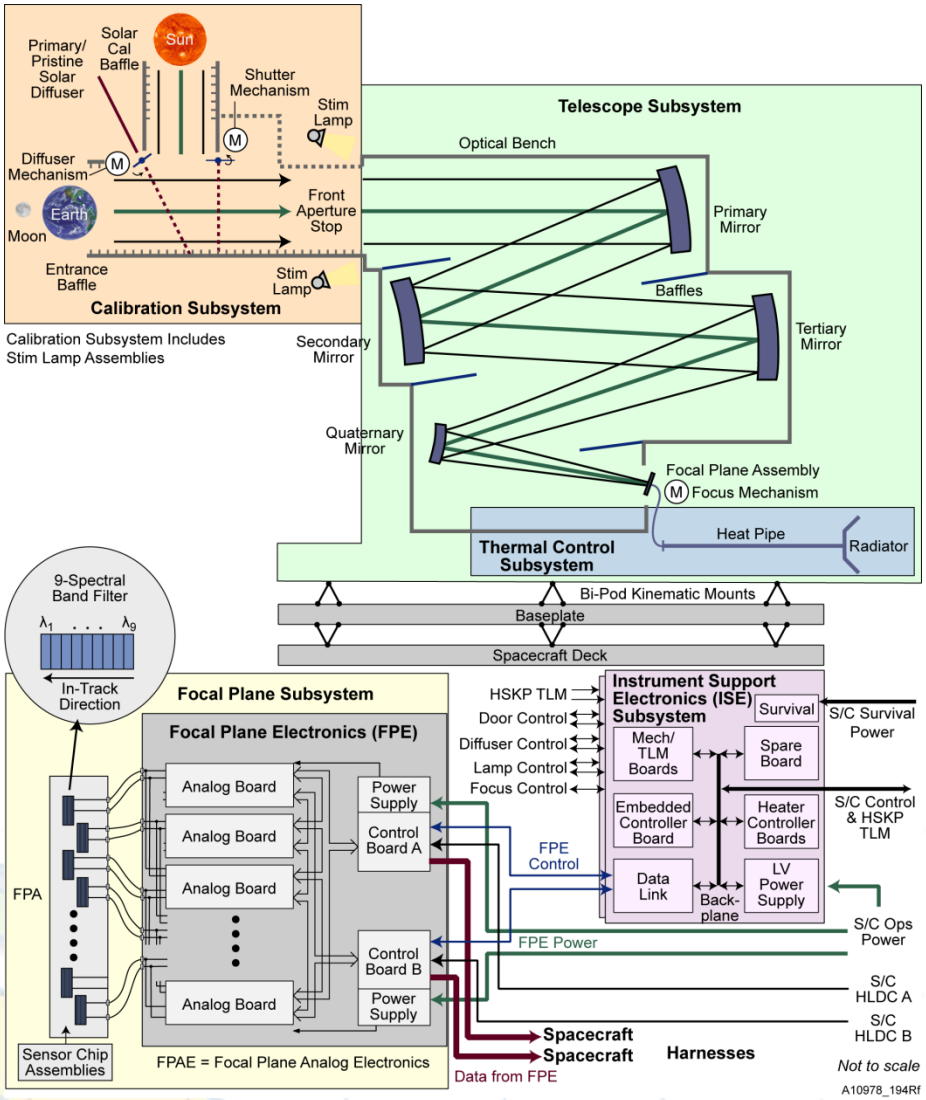

OLI uses 4 large state-of the-art Silver coated mirrors in the telescope.

- The mirrors project the image onto the detector arrays.
- They are large so they will provide:
  - a 15.1 deg. FOV.
  - 15/30 meter resolution
  - enough light collect for good sensitivity
- They must be ultra-clean and ultra-smooth to reduce scattered light.

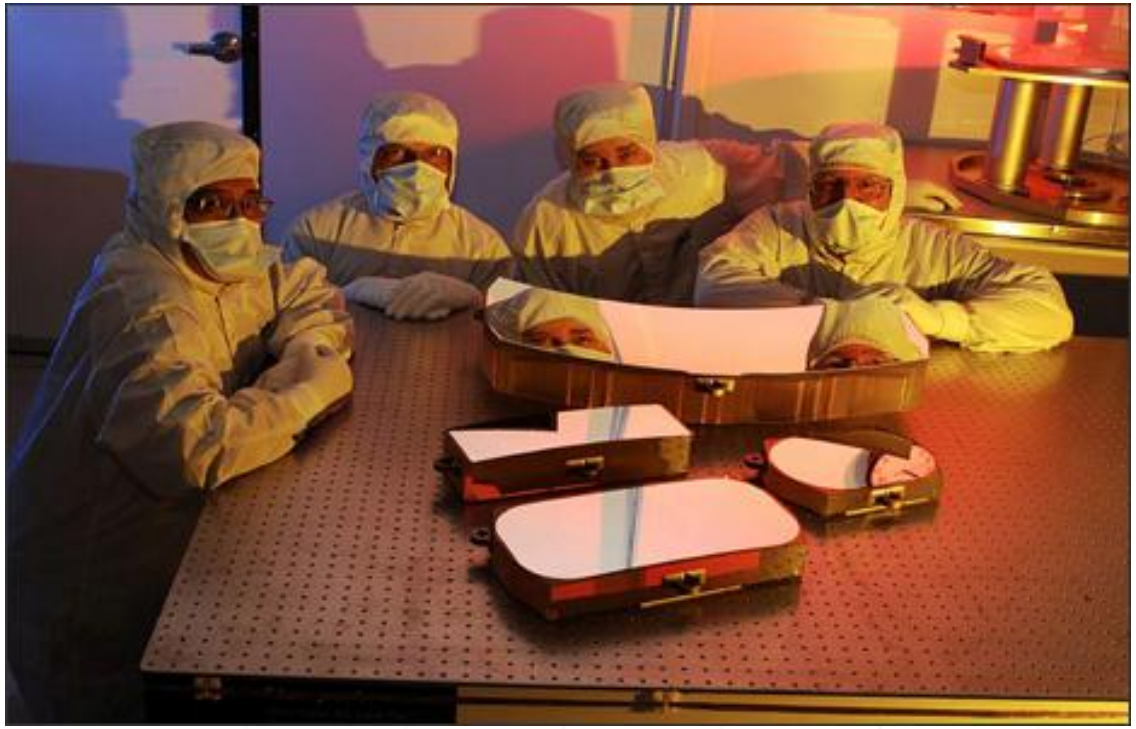

OLI Focal Plane Assembly

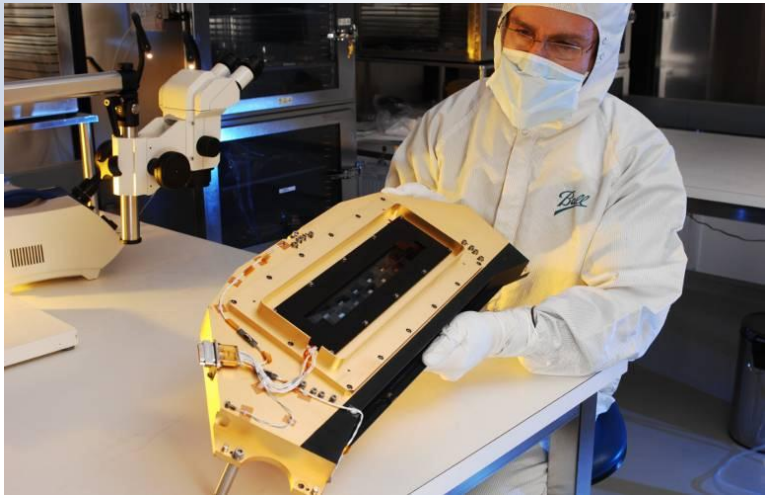

Focal Plane Module

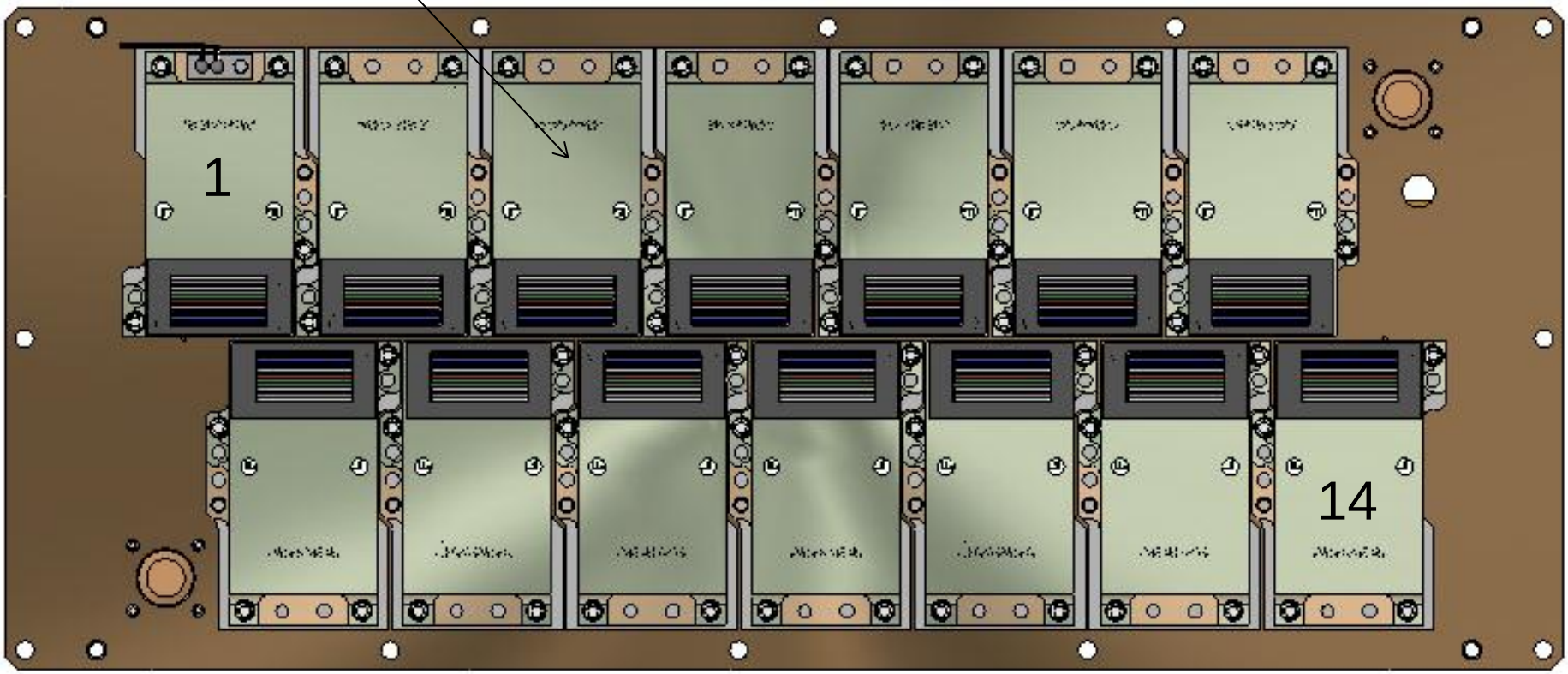

OLI Stimulation Lamp Assembly

- Track short/mid-term stability
- Transfer to orbit calibration for the Cirrus band.
- Stimulate the FPA with the shutter closed for testing and signal related noise assessment.

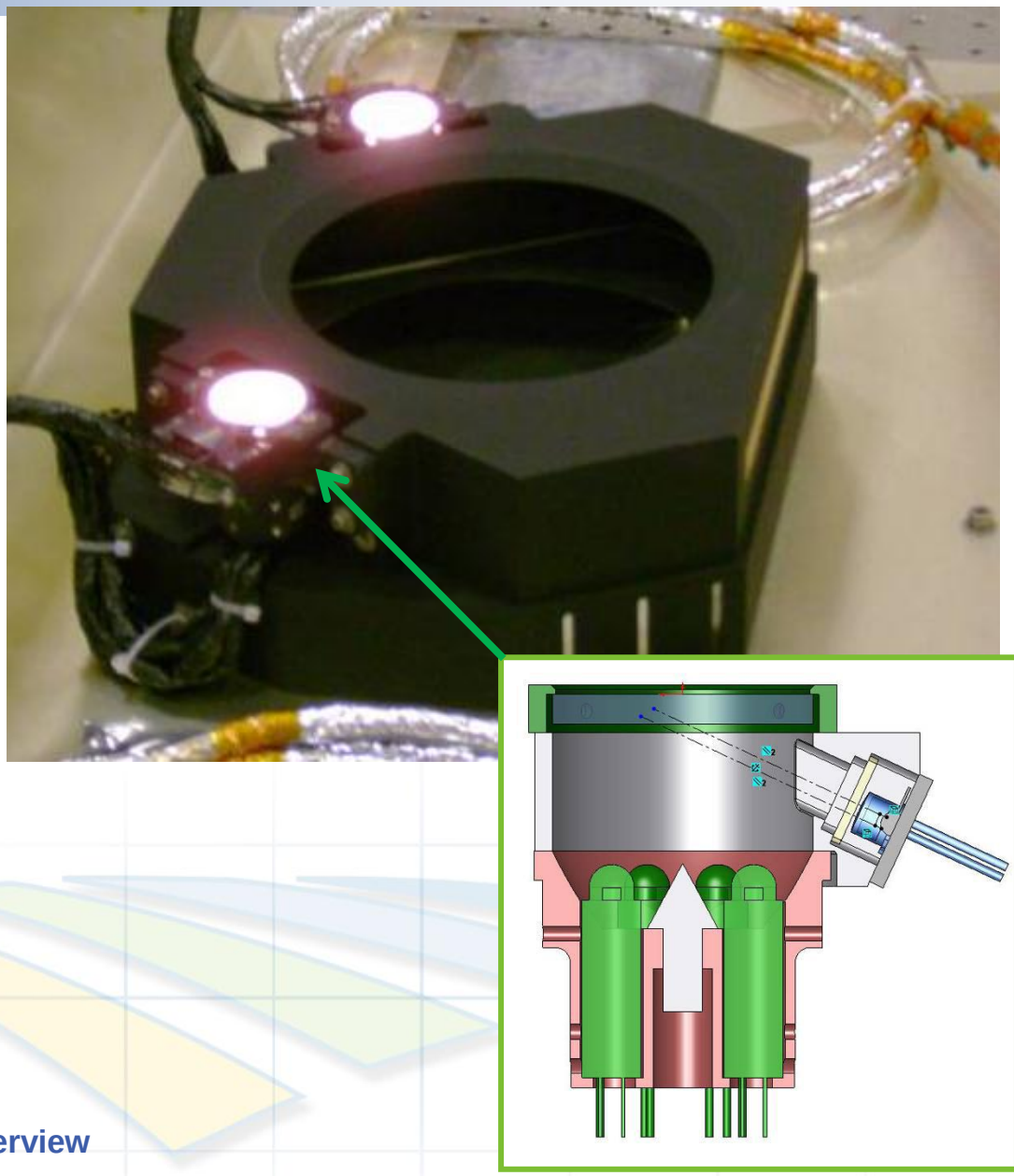

Solar Calibration Subsystem for LDCM's Operational Land Imager

- Solar Diffuser Calibrator Wheel:
  - 2 Spectralon (Teflon) Panels
    - 1 working panel
    - 1 pristine reference
- Nominally nadir viewing
  - +-15 degrees for special acquistions.
- Sun viewing using spacecraft inertial hold maneuver.

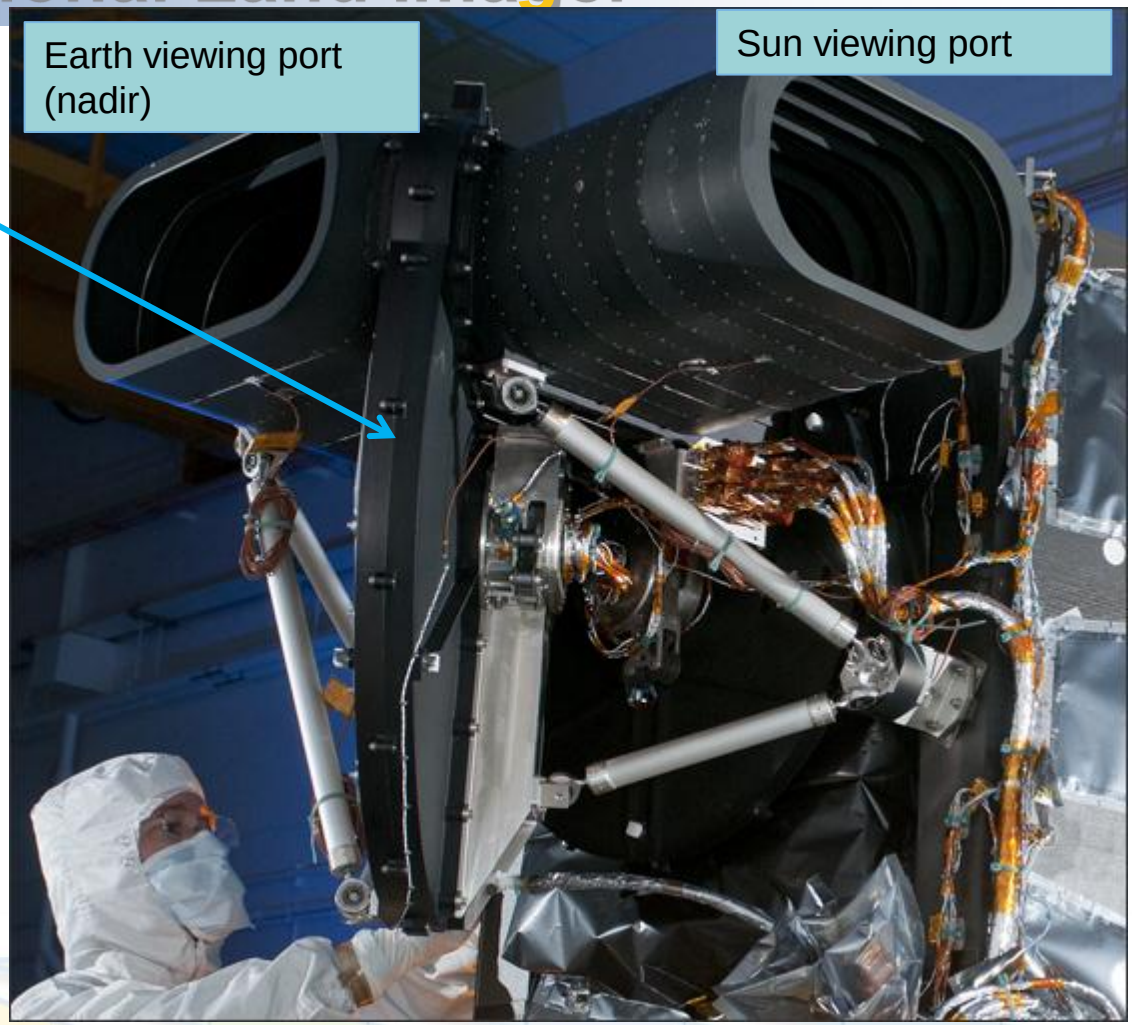

Courtesy of BATC

OLI Glamour shot—pre-blankets and sunshade

Solar Diffuser Calibrator:
2 Spectralon (Teflon) Panels

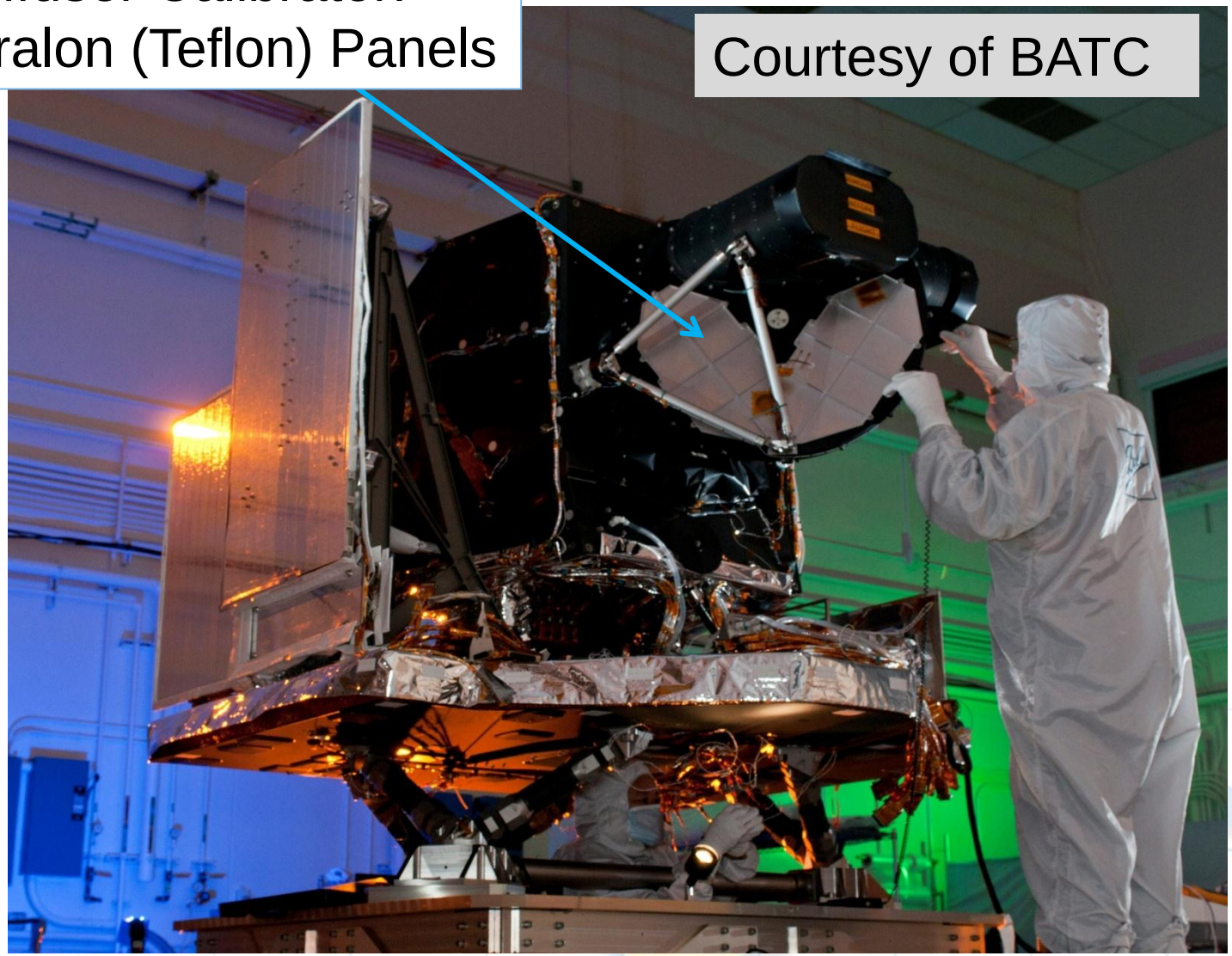

Thermal Infrared Sensor (TIRS)

- Collects 400 scenes per day using a pushbroom design
  - Coincident with OLI data collection
- Covers a 185 km (115 mile) swath
- Collects data for two long-wave spectral bands
  - Provides continuity with one TM/ETM+ thermal band
- Provides a 100 m (328 ft) spatial resolution
- Collects calibration data
  - Space view for near absolute zero ref. (On opposite side)
  - Earth viewing port.
  - On-board blackbody (ie. warm/hot plate) (Internal)

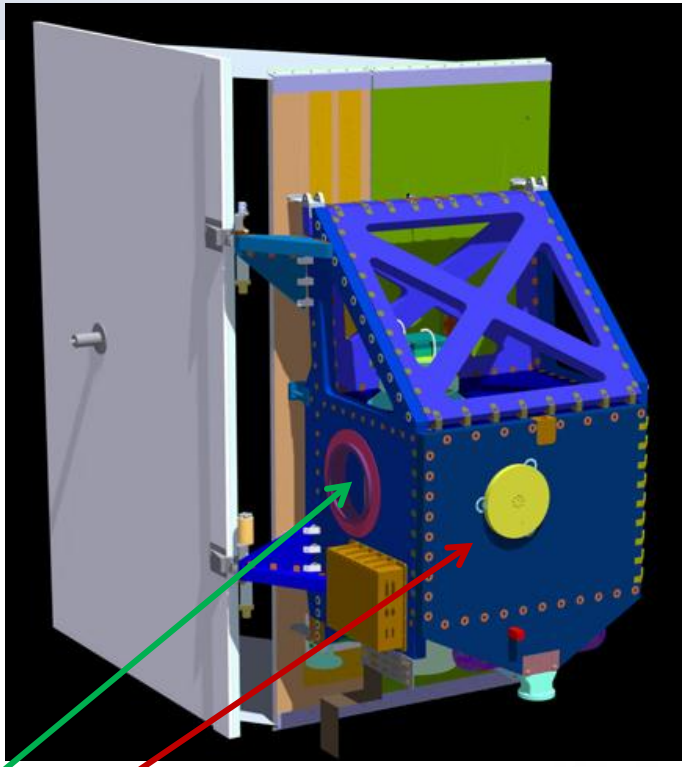

TIRS FPA Architecture

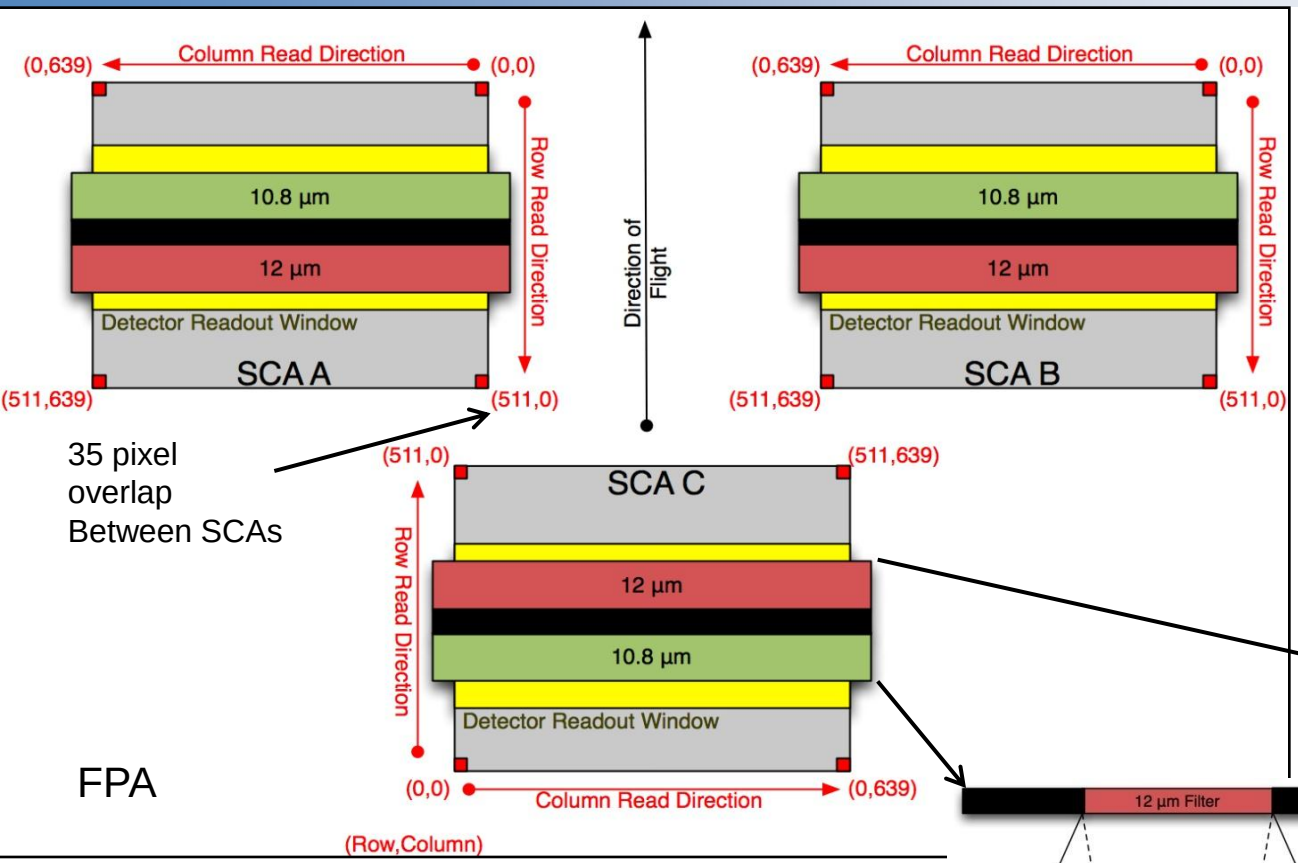

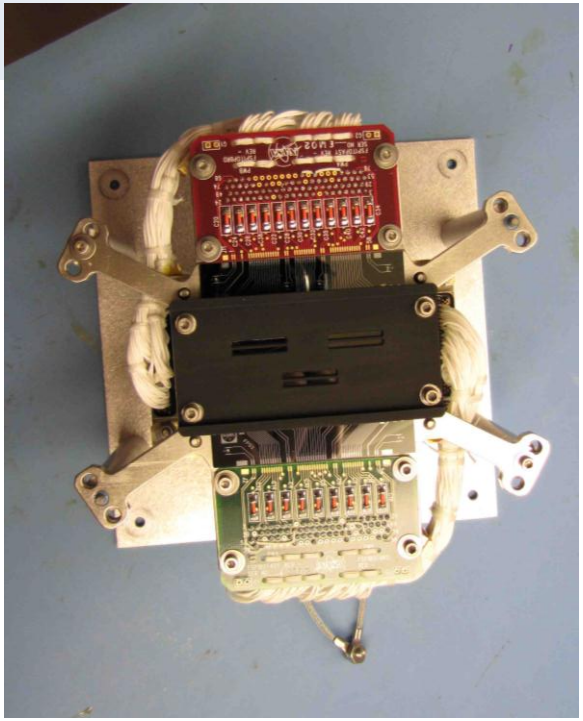

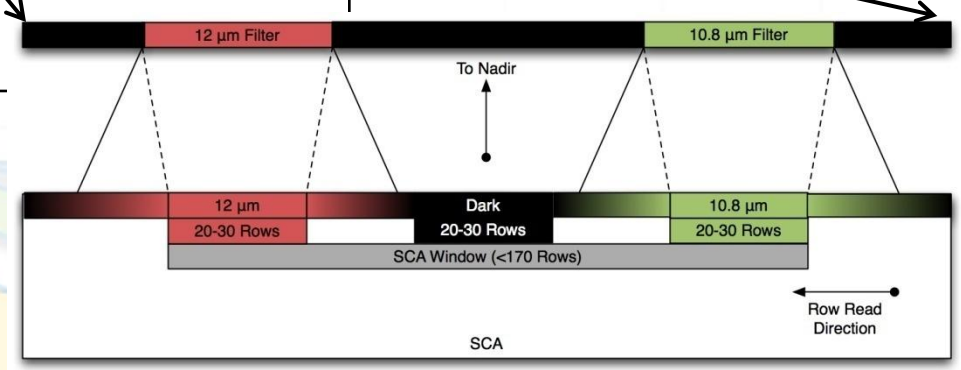

- TIRS Sensor Chips use quantum well infrared photodetector (QWIP) detector technology
  - Gallium Arsenide (GaAs) semiconductor detector chip
  - Bump-bonded to a ROIC

TIRS Cryocooler

- The QWIP detectors need to be cooled to a very chilly **43K** (-382F) in order to get optimal thermal data.
- The cooler was built by Ball Aerospace in Boulder, CO

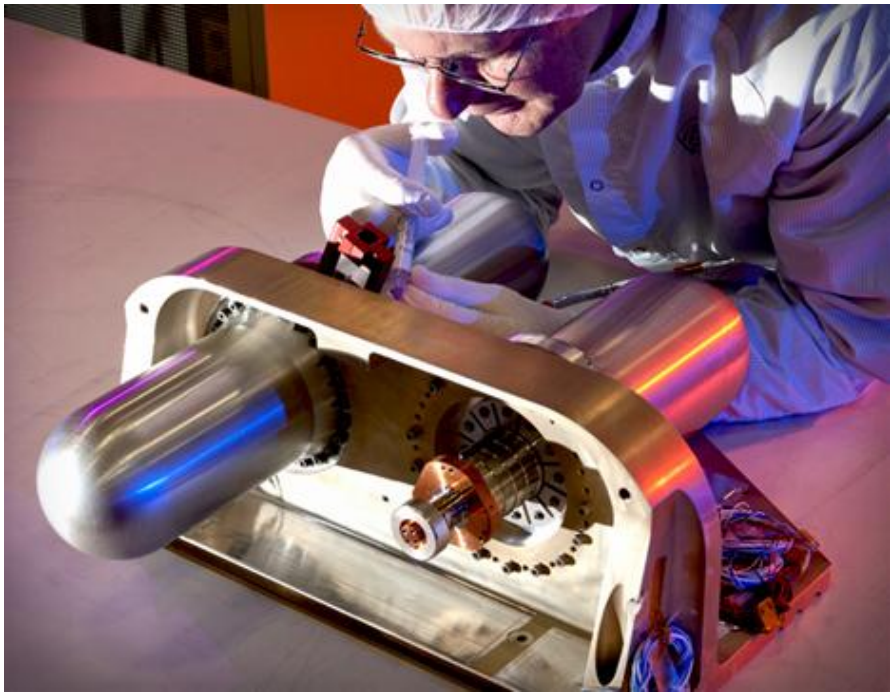

TIRS On-board Black Body Calibrator

- Provides a uniform calibration scene of known apparent temperatures close to critical scene temperatures.
- Adjustable Temperature Set-points on orbit. (nominally 295K)
- Allows for frequent calibration and correction of gain and non-linearity changes.

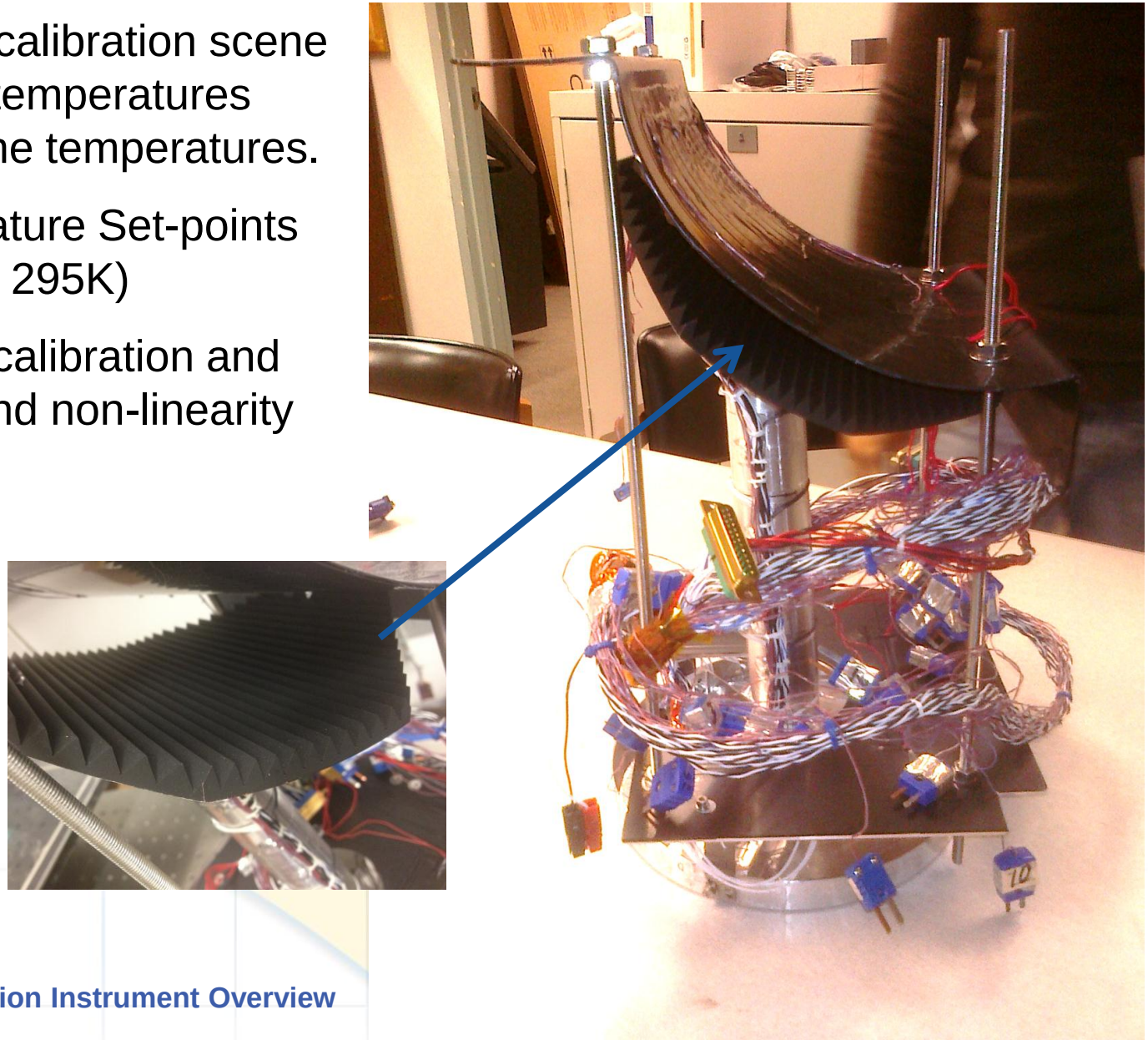

TIRS Scene Select Mirror (SSM)

- Gold coated to reflect infrared radiation (heat) between 10.3 microns and 12.5 microns.
- Selects between:
  - Nadir Earth view
  - Space view (near absolute zero for offset calibration)
  - Warm/hot internal blackbody calibrator view (gain calibration)

LDCM Launches in less than 7 days!

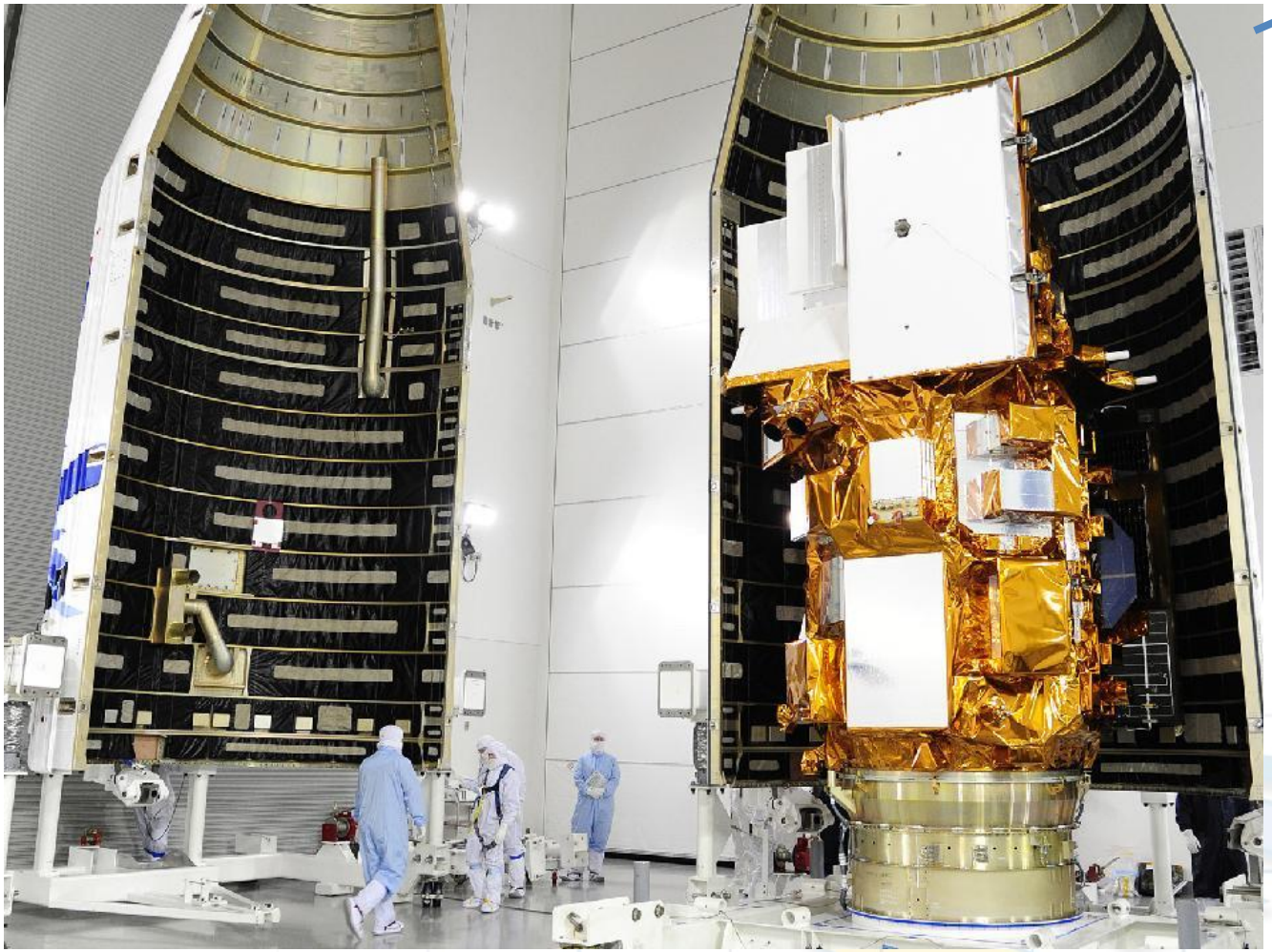

Humans

Simulated L0R Detail

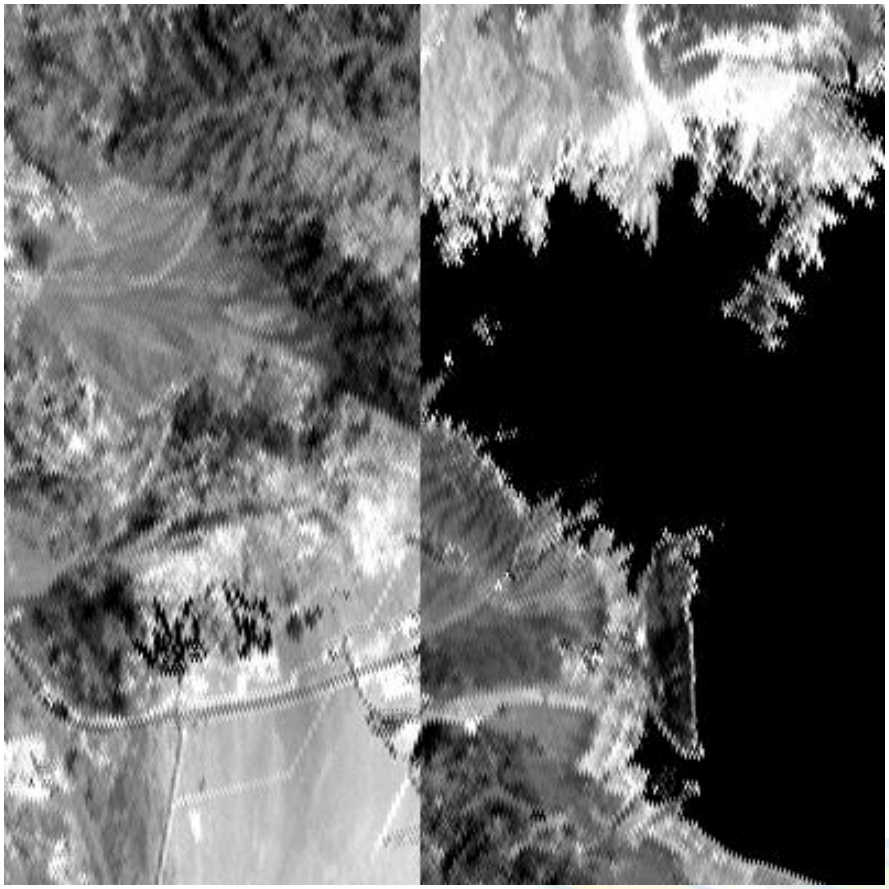

Note SCA & detector misalignment

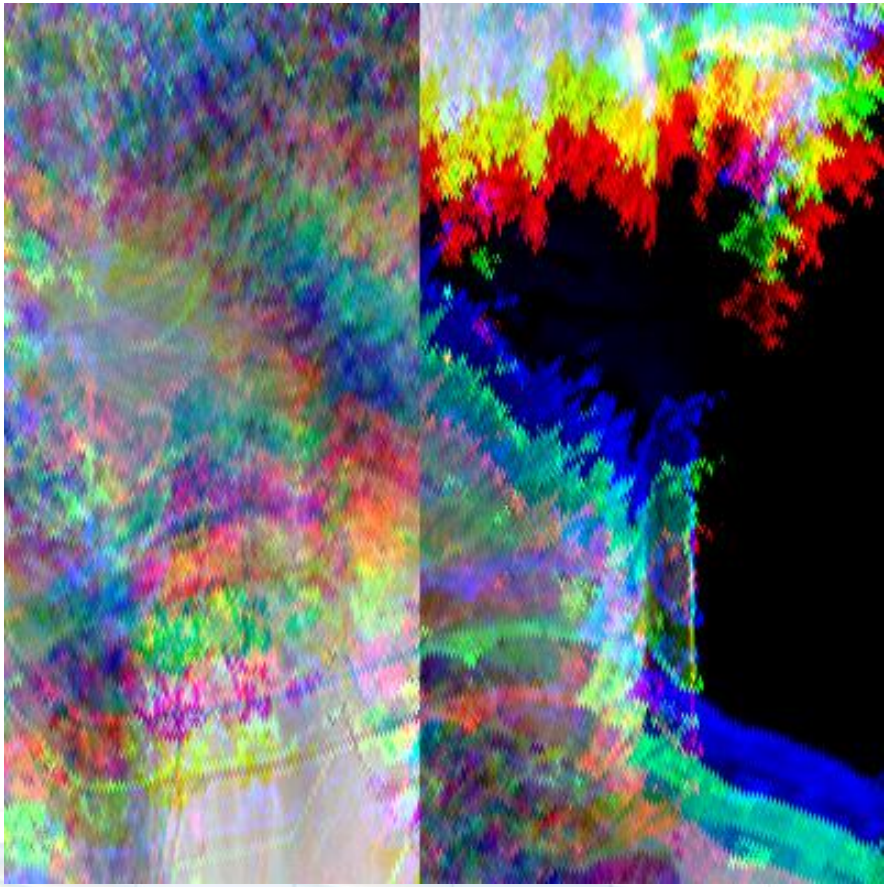

Band, SCA & detector misalignment

Corresponding L1T Detail

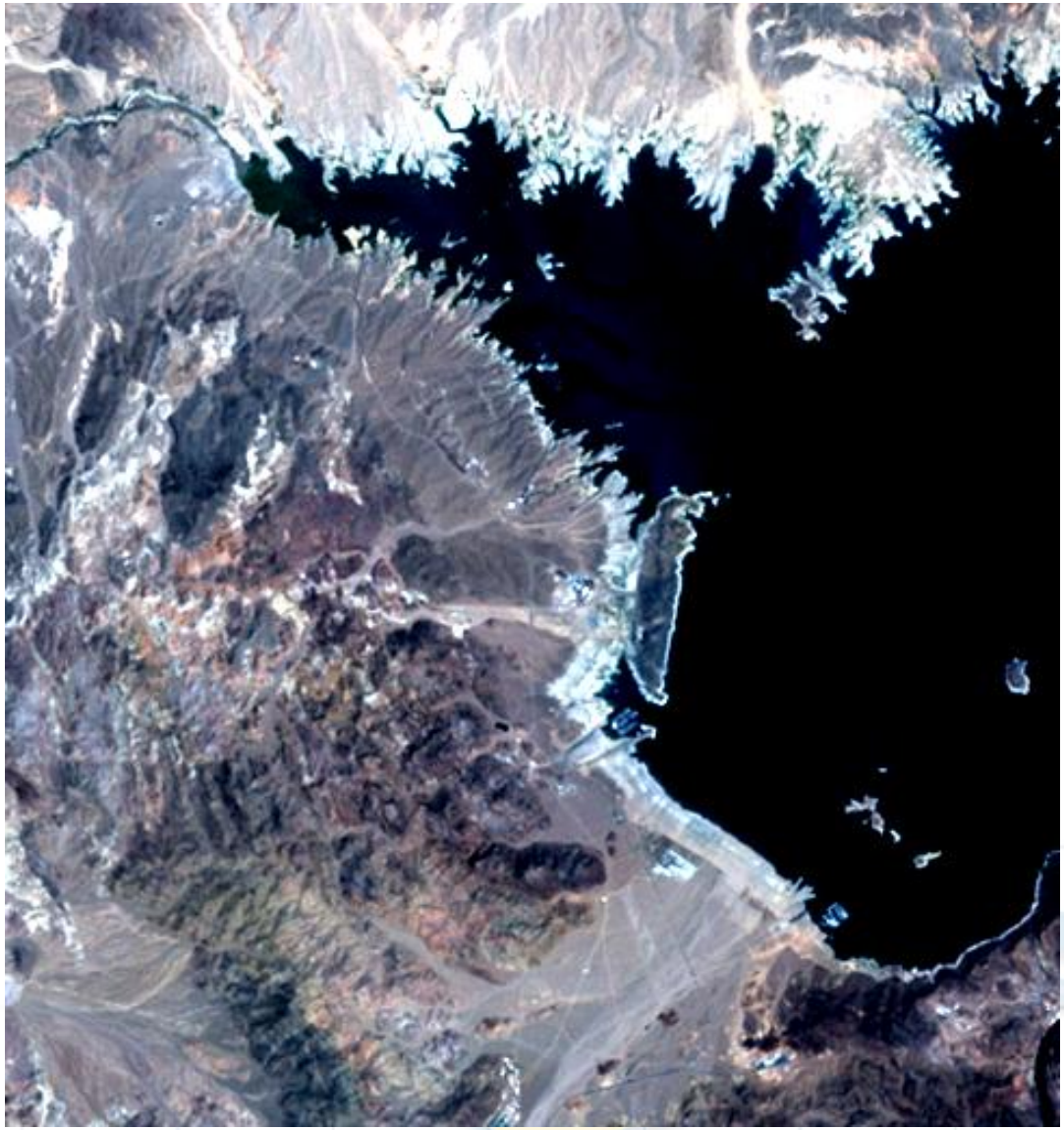

Acknowledgements and Credits

- The following persons contributed significant expertise, effort, and material towards the preliminary results shown here. Many others unnamed here were also instrumental in the success. Our apologies to anyone inadvertently left off this list.
  - Kurt Thome – NASA TIRS Calibration Scientist
  - Julia Barsi – NASA/LPSO/SAIC
  - Brent Canova - Ball Aerospace & Technologies Corp.
  - Aaron Gerace - Rochester Institute of Technology
  - Ron Hayes - USGS
  - Edward Kaita – NASA/SAIC
  - Edward J. Knight - Ball Aerospace & Technologies Corp.
  - Geir Kvaran - Ball Aerospace & Technologies Corp.
  - Raviv Levy – NASA/LPSO/SAIC
  - Matthew Montanaro – NASA/SigmaSpaceCorp TIRS
  - Ron Morfitt - USGS
  - Jeff Pedelty – NASA LDCM/OLI
  - John Schott - Rochester Institute of Technology ….plus many others….