Landsat 9 calibration: New techniques for OLI-2 and TIRS-2

Joel McCorkel
NASA Goddard Space Flight Center

Instrument calibration changes

- TIRS-2
  - Class C to B
  - Optical design change (baffles)
  - Subsystem test for wider field characterization
- OLI-2
  - Spectral characterization methodology

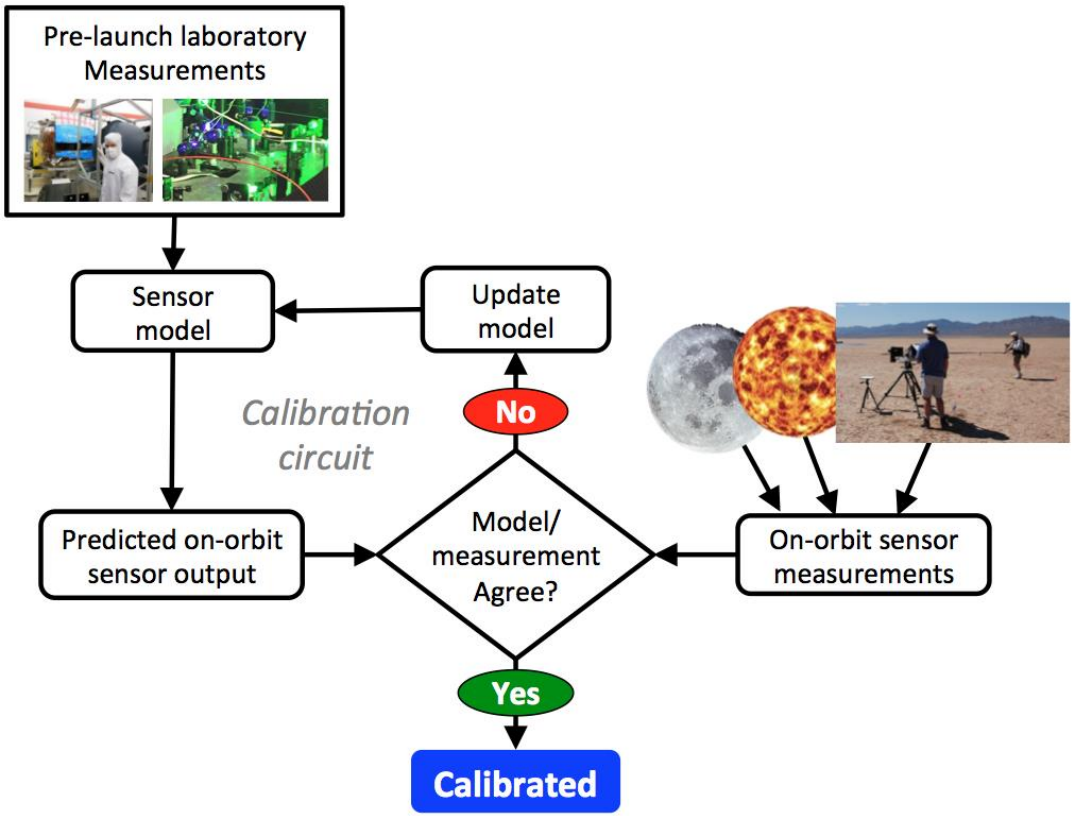

TIRS-2 timeline
stray light highlights

- **Dec 2015** – Independent modeling effort begins
  - Reproduced features seen on-orbit with TIRS-1
  - Modeled mitigation baffle performance
- **May 2016** – Pre-PDR Engineering Peer Review for Scattered Light mitigation
- **June 2016** – PDR
  - Form review team for ambient and thermal vacuum stray light testing
- **Aug-Dec 2016** – Ambient testing w/ flight spare, flight telescope
- **June 2017** – Telescope-FPA subsystem testing for wide-field stray light characterization
  - ”TIPCE” test: TIRS Imaging Performace and Cryoshell Evaluation
- **2018** – Instrument level testing

TIRS-1 sneak paths 1of2 (13 deg)

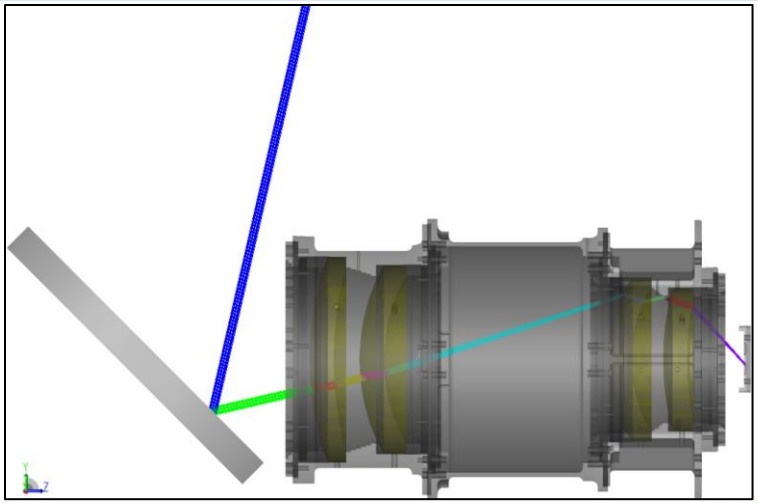

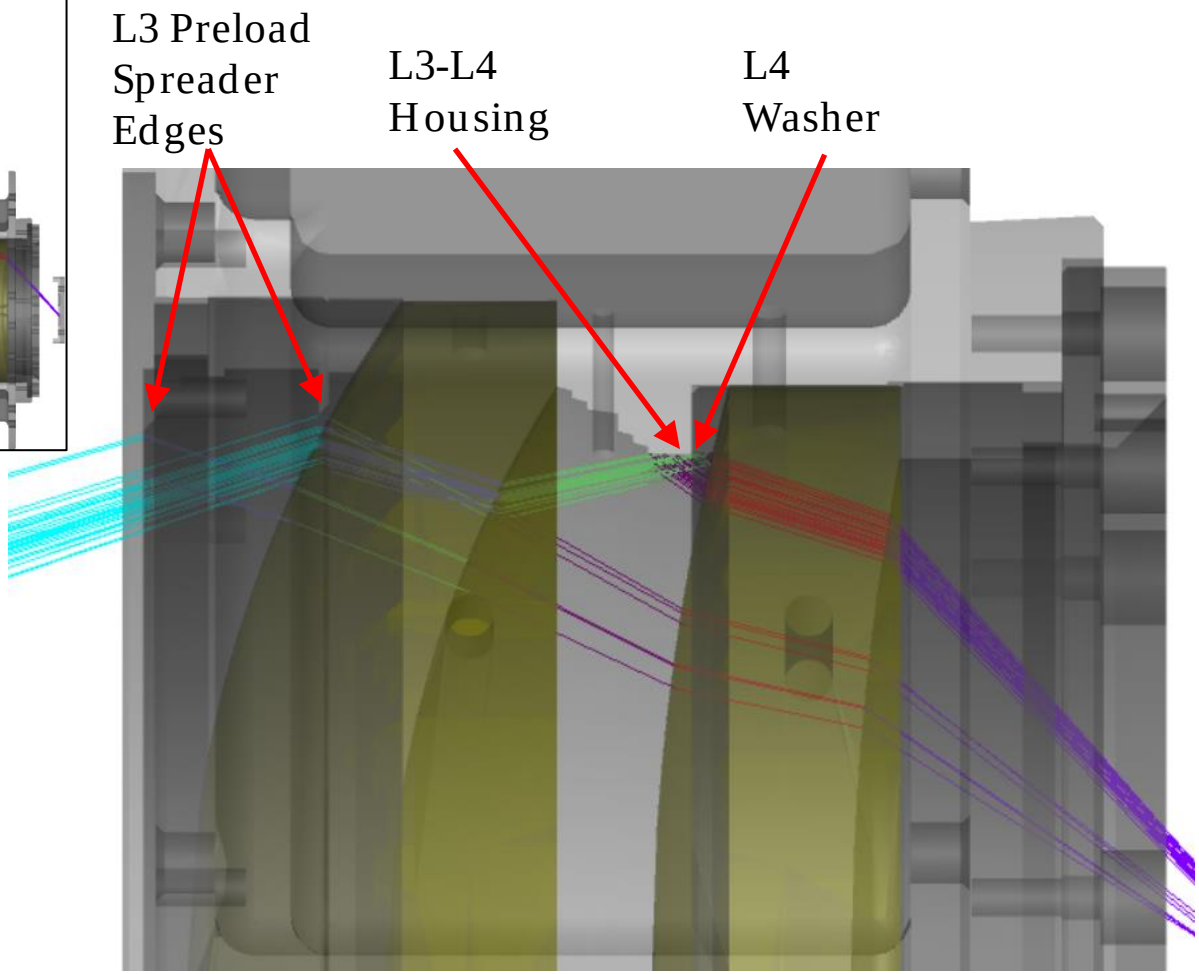

Baffles for stray light reduction

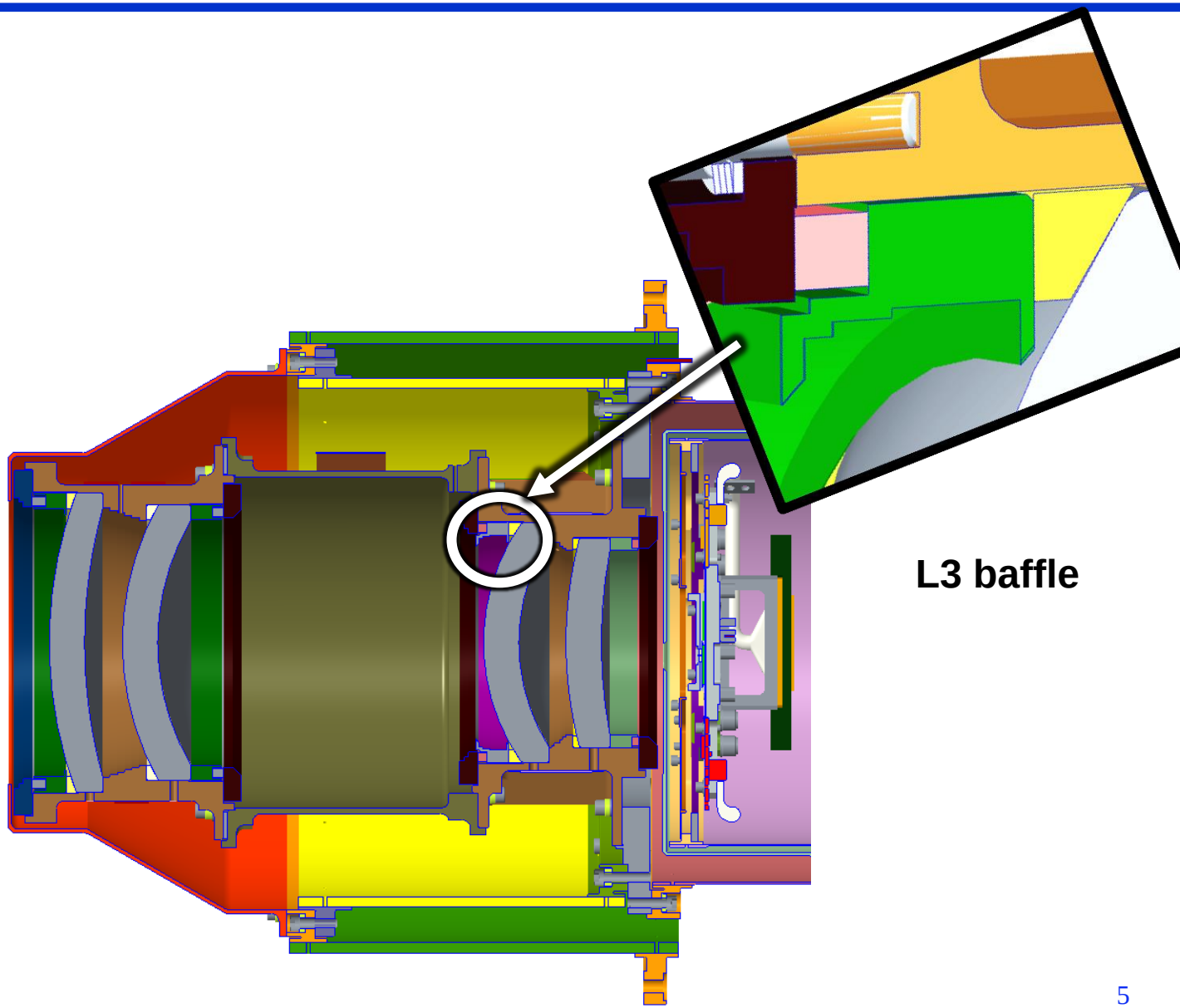

TIRS-1 sneak paths 2of2 (20 deg)

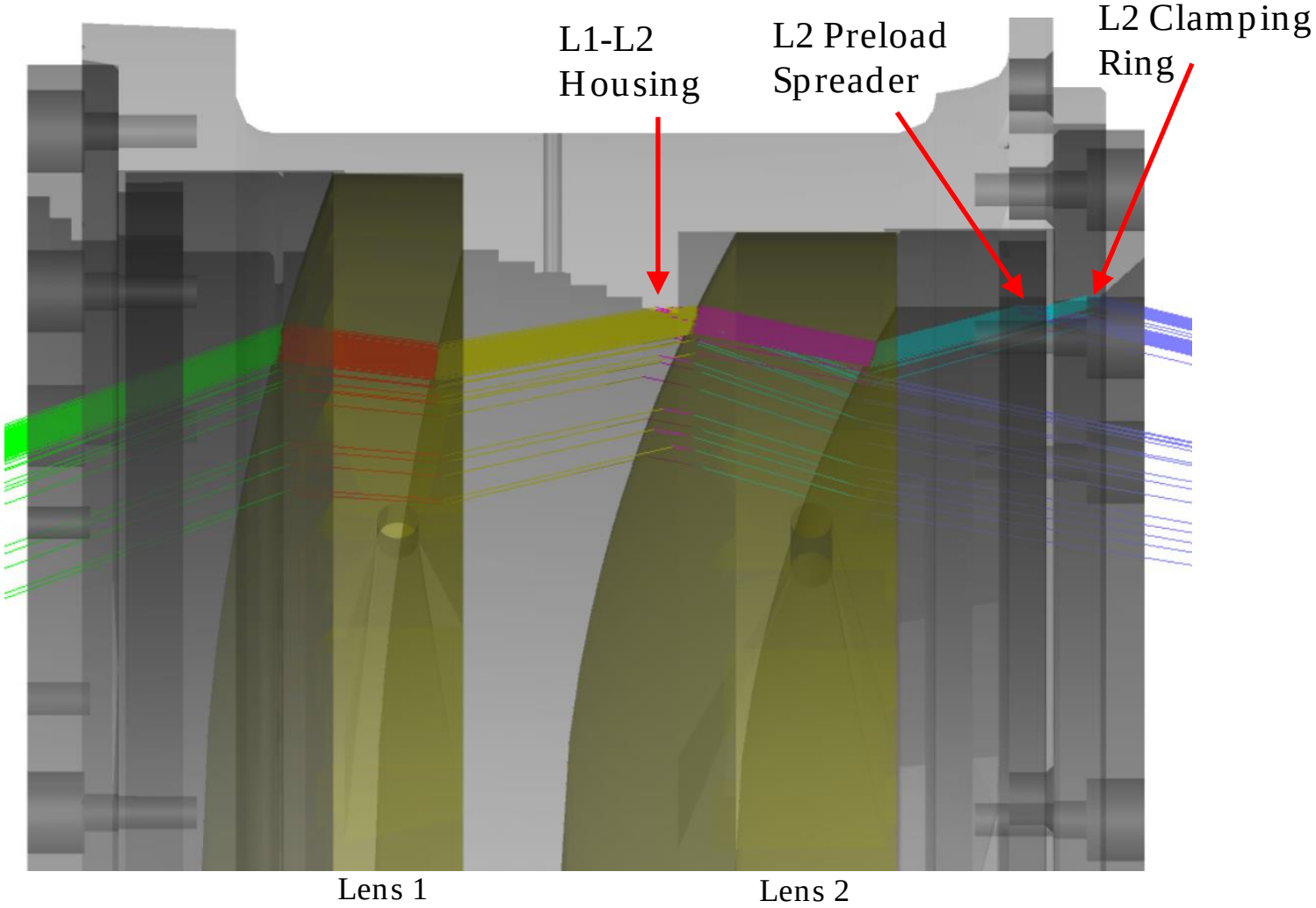

Baffles for stray light reduction

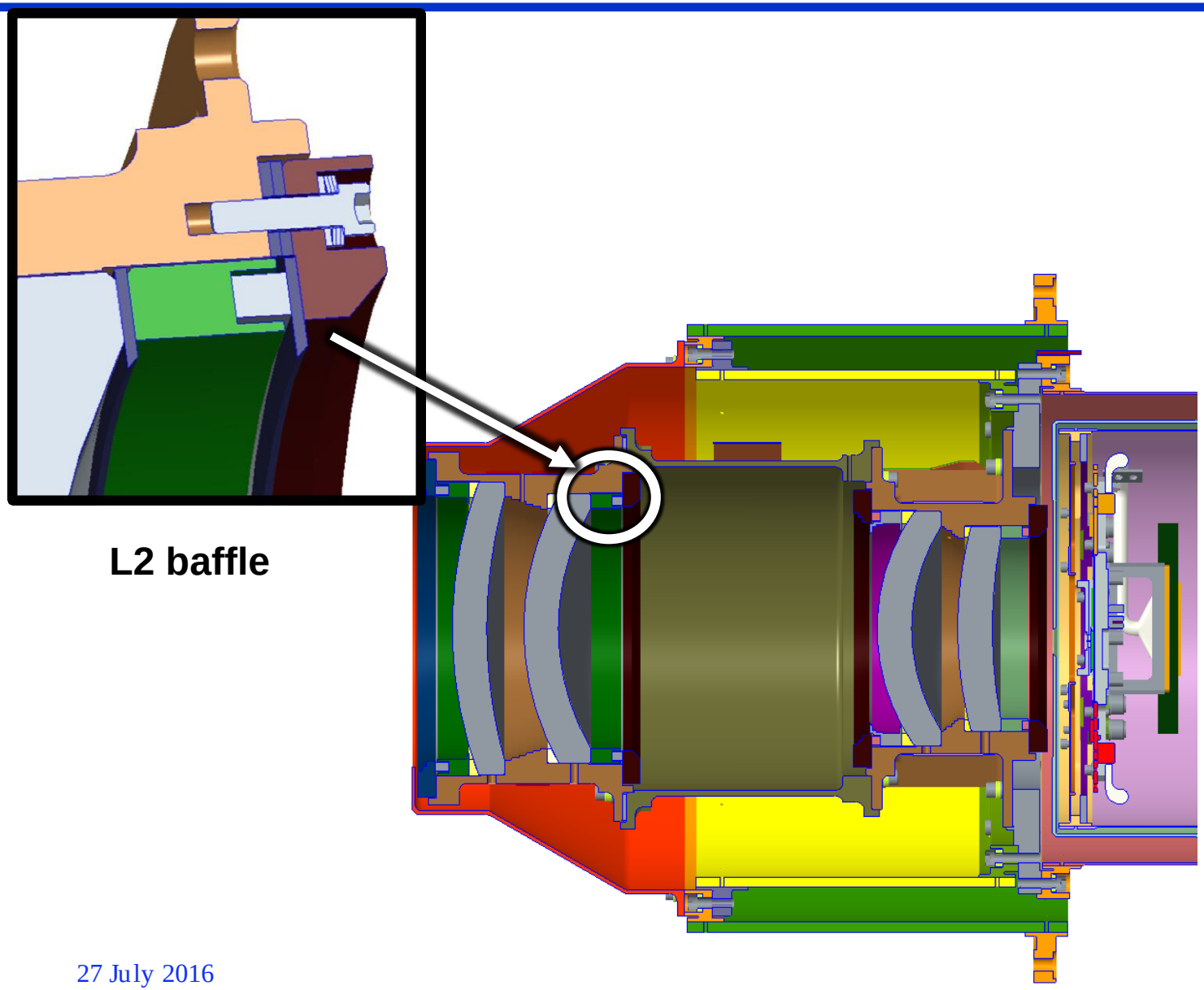

Stray light modeling

GSFC & Independent (SDL) models agree

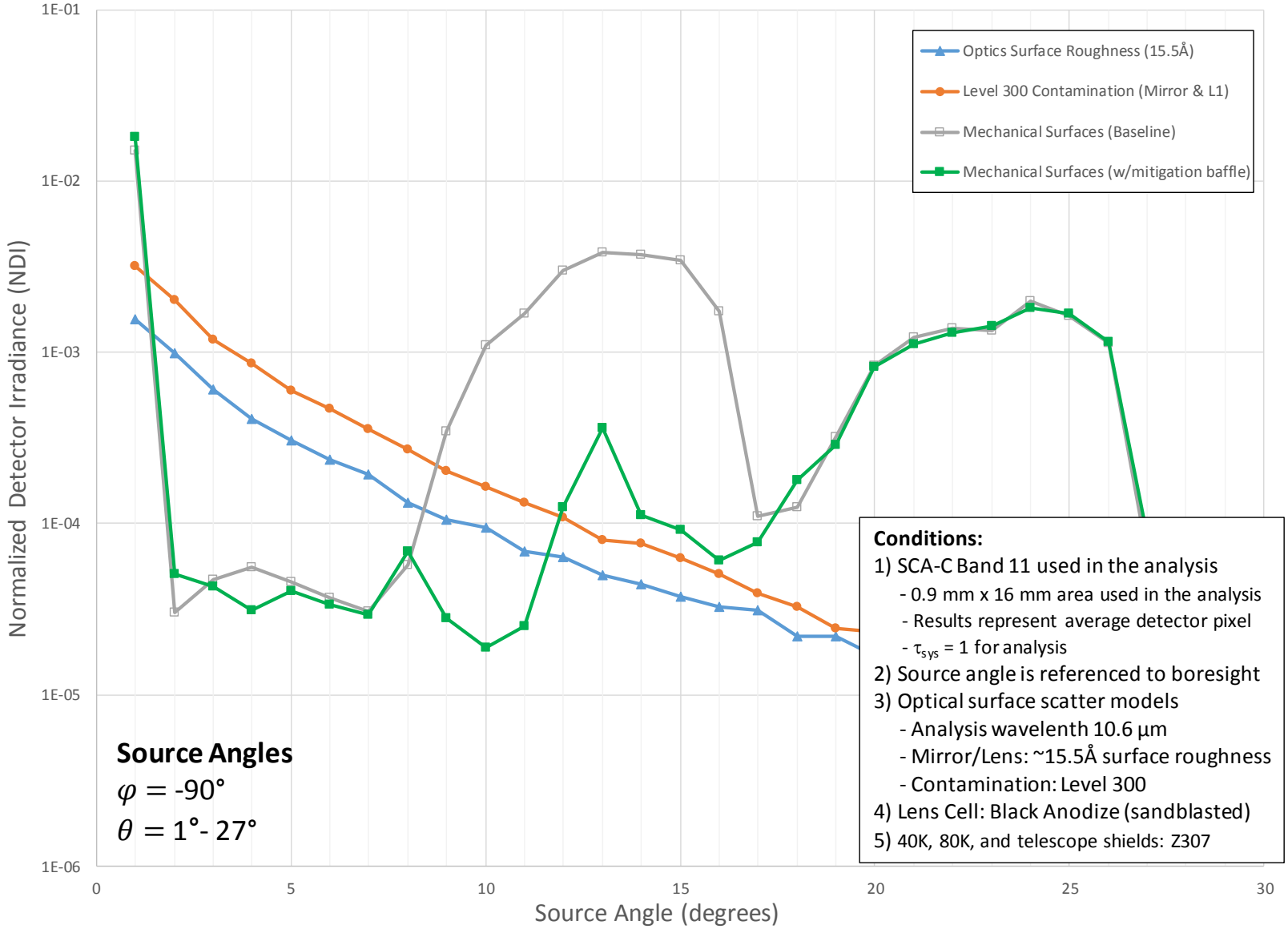

TIRS-2 subsystem-level “TIPCE” testing

Instrument level

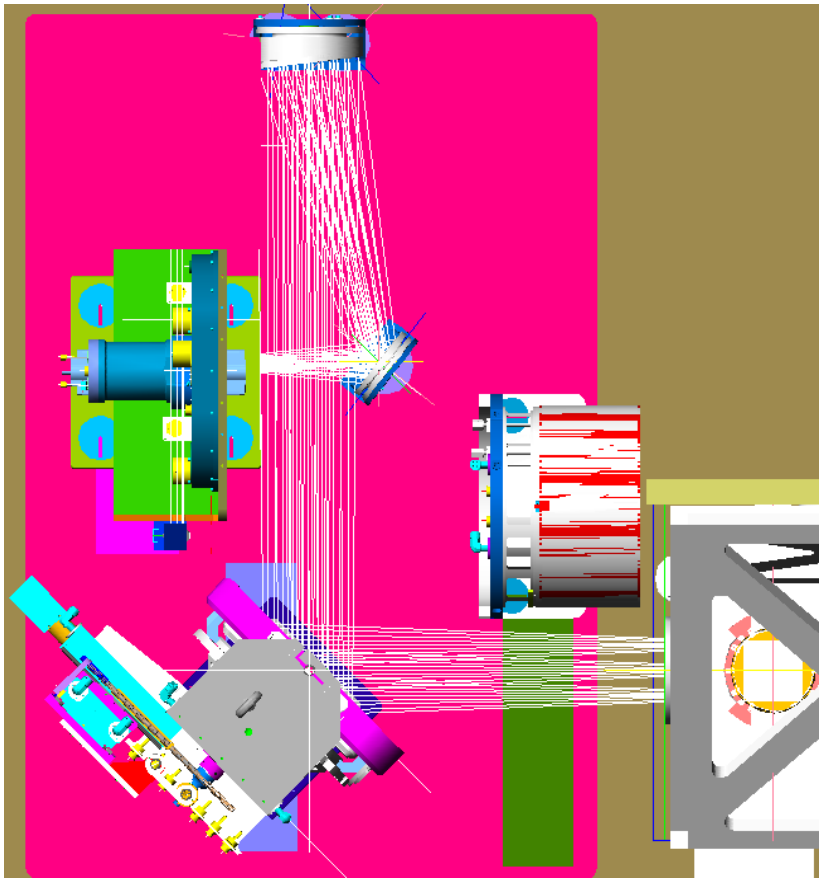

Telescope-FPA subsystem level

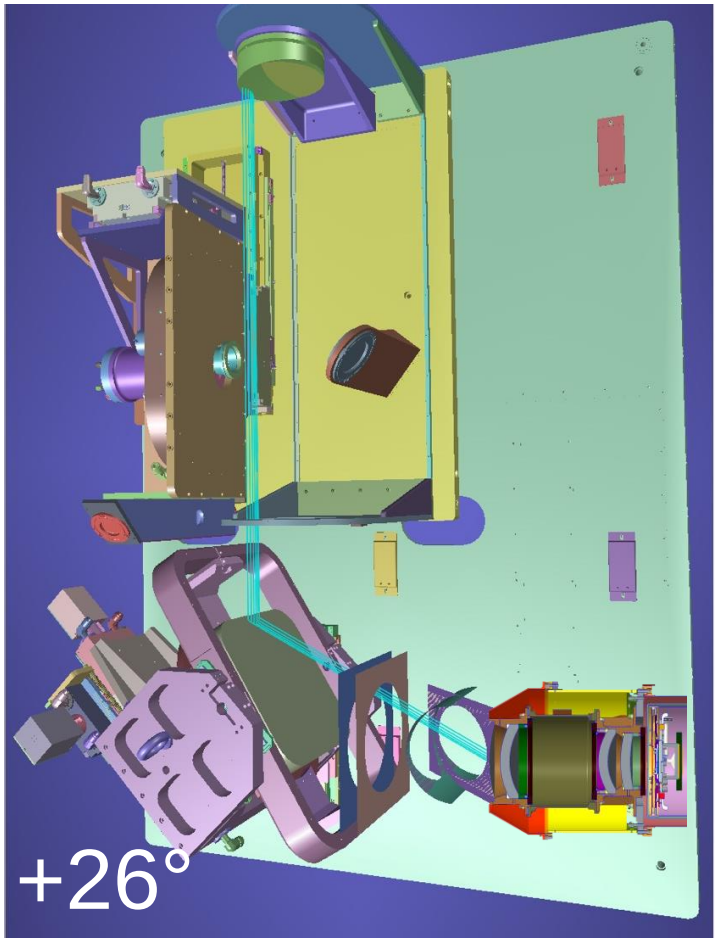

TIRS-2 Schedule

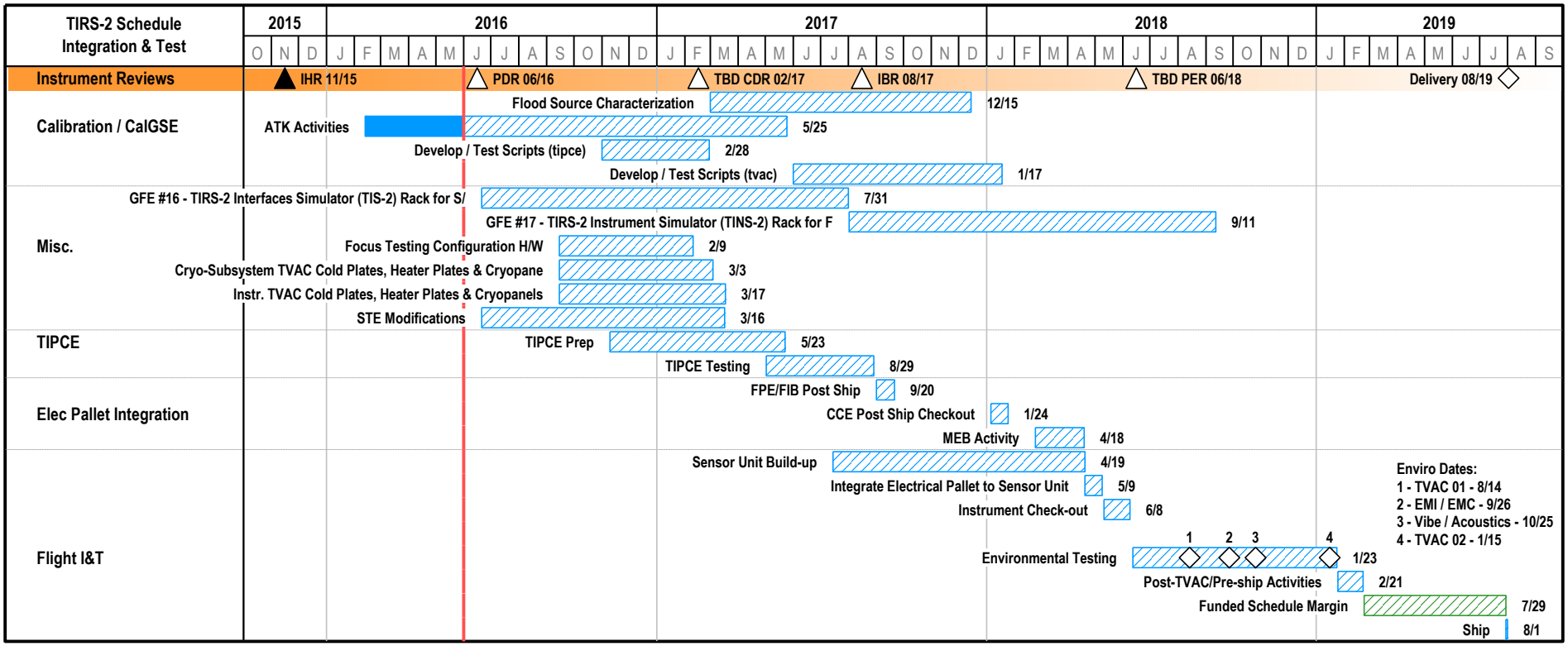

GLAMR for OLI-2
spectral characterization

Goddard Laser for Absolute Measurement of Radiance

Detector and laser-based calibration for next gen accuracies

- Future process and climate sensors have increasingly more stringent sensor responsivity calibration requirements
  - **PACE** has **2%** laboratory calibration uncertainty requirement
  - **CLARREO** has a **0.3%** requirement for reflectance

- Traditional sensor characterization methods do not meet these requirements – the solution lies in
  - More advanced instrument models
  - Appropriate parameterization of these models, i.e. use appropriate light source for instrument testing
  - Detector-based standards providing 0.09% k=2 radiometric uncertainty

Why laser-based calibration?

…because photons go everywhere

Example is the ASTER focal plane:

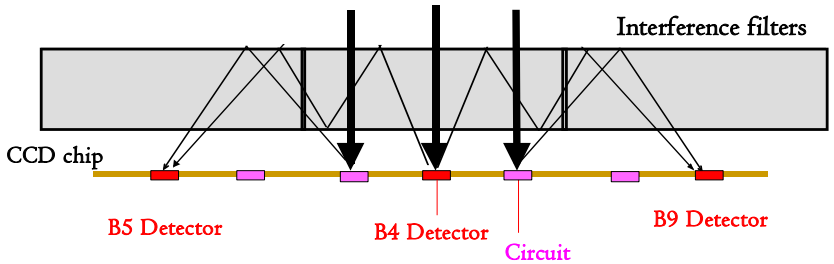

Example of two types of imagers:

Multispectral pushbroom/whiskbroom

Landsat, MODIS, VIIRS

White light is focused

Imaging Spectrometer

JPL: AVIRIS-ng, NEON, Carnegie, M3
TacSat-3 ARTEMIS
CLARREO Pathfinder

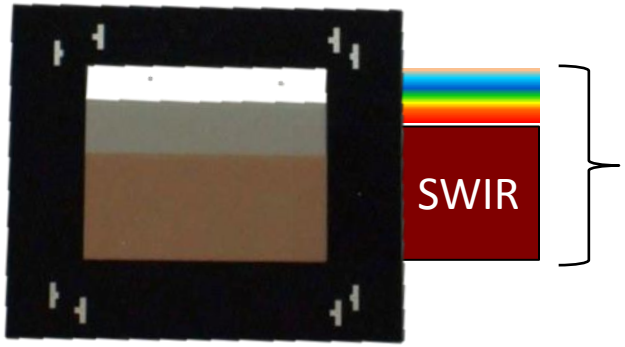

Order-sorting filter

Focused light is spectrally separated

GLAMR is required for improving instrument model parameterization

- Stray/scattered light
- Spectral/radiometric response
- Linearity
- Crosstalk
- Detector-to-detector differences

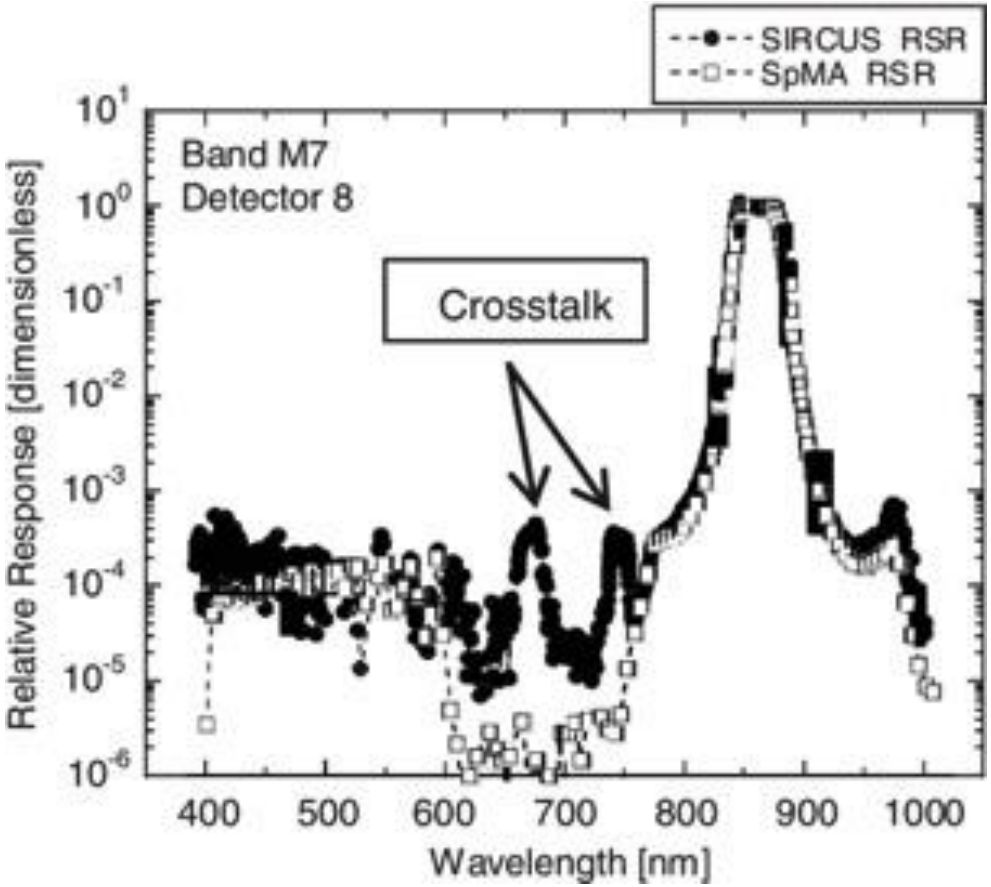

Traceability path

NIST Facility

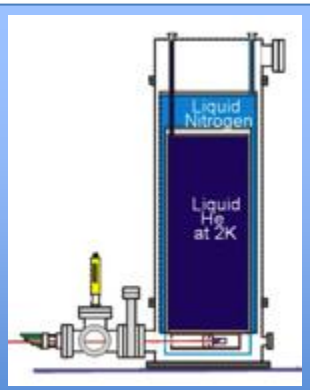

POWR
Primary Optical Watt Radiometer

→

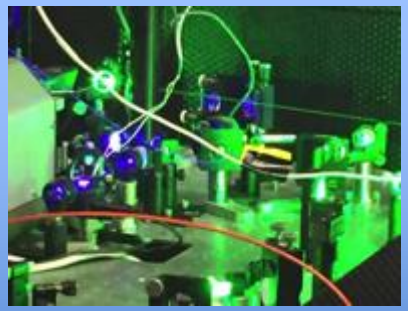

Stabilized laser source is used to transfer radiometric scale from POWR to portable transfer radiometer via another standard radiometer

→

LTD-11 #107
transfer radiometer

Sensor vendor facility

LTD-11 #107
transfer radiometer

→

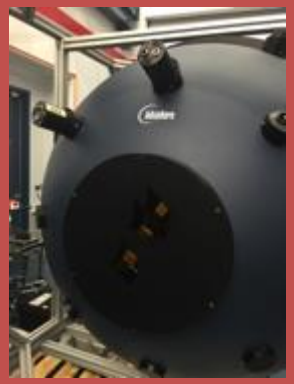

Sphere Monitor

→

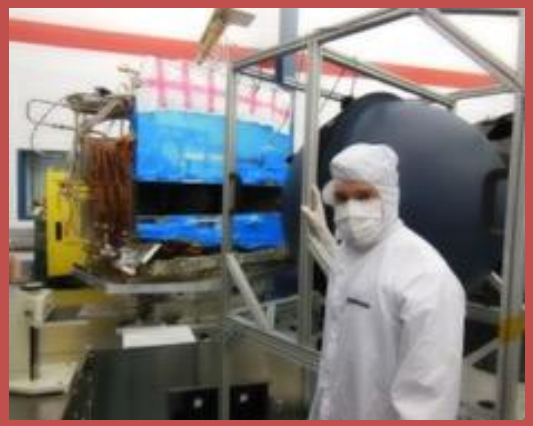

Satellite/airborne sensor

Laser system:
Goddard Laser for Absolute Measurement of Radiance

GLAMR

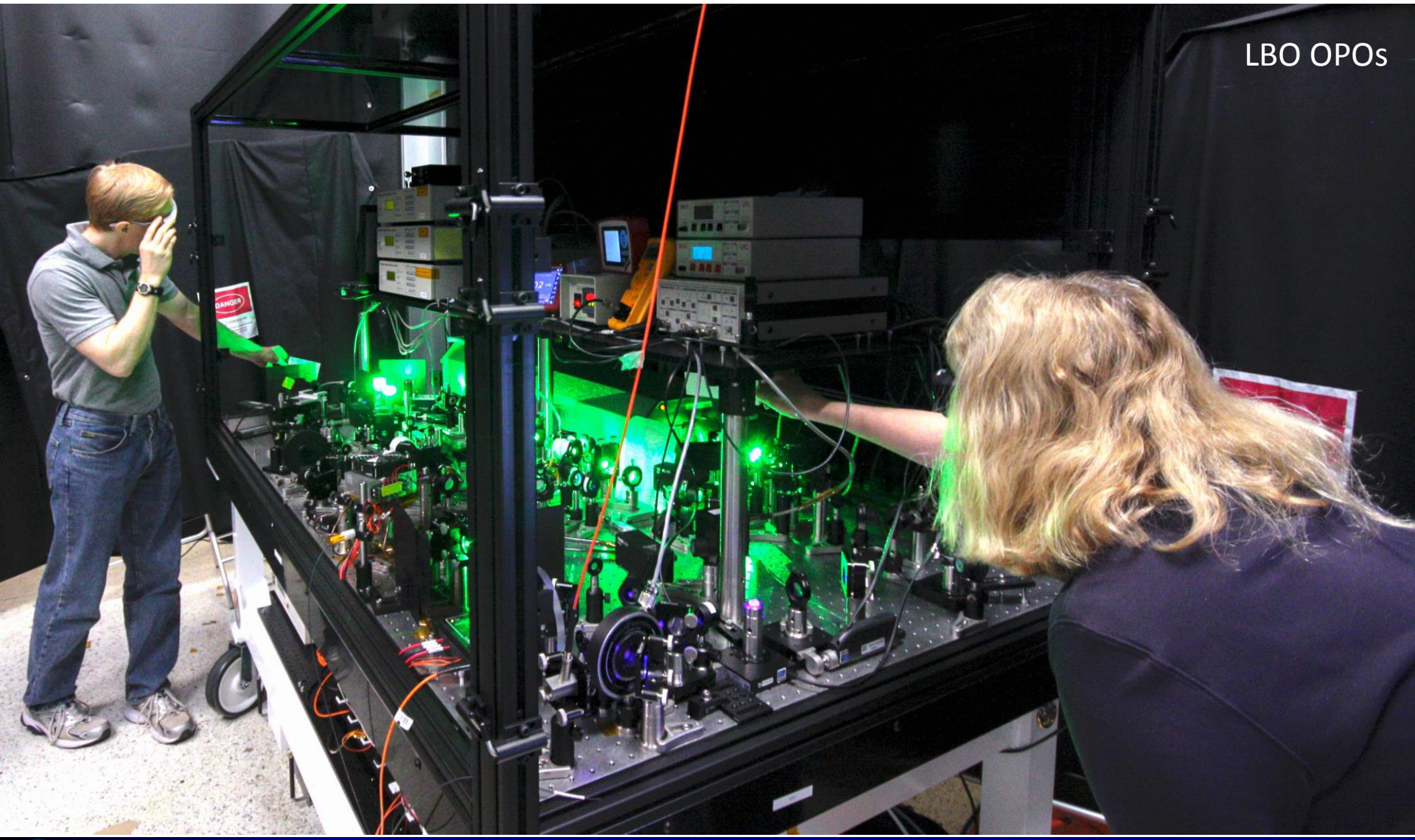

JPSS-2 VIIRS testing with GLAMR begins Aug 2, 2016

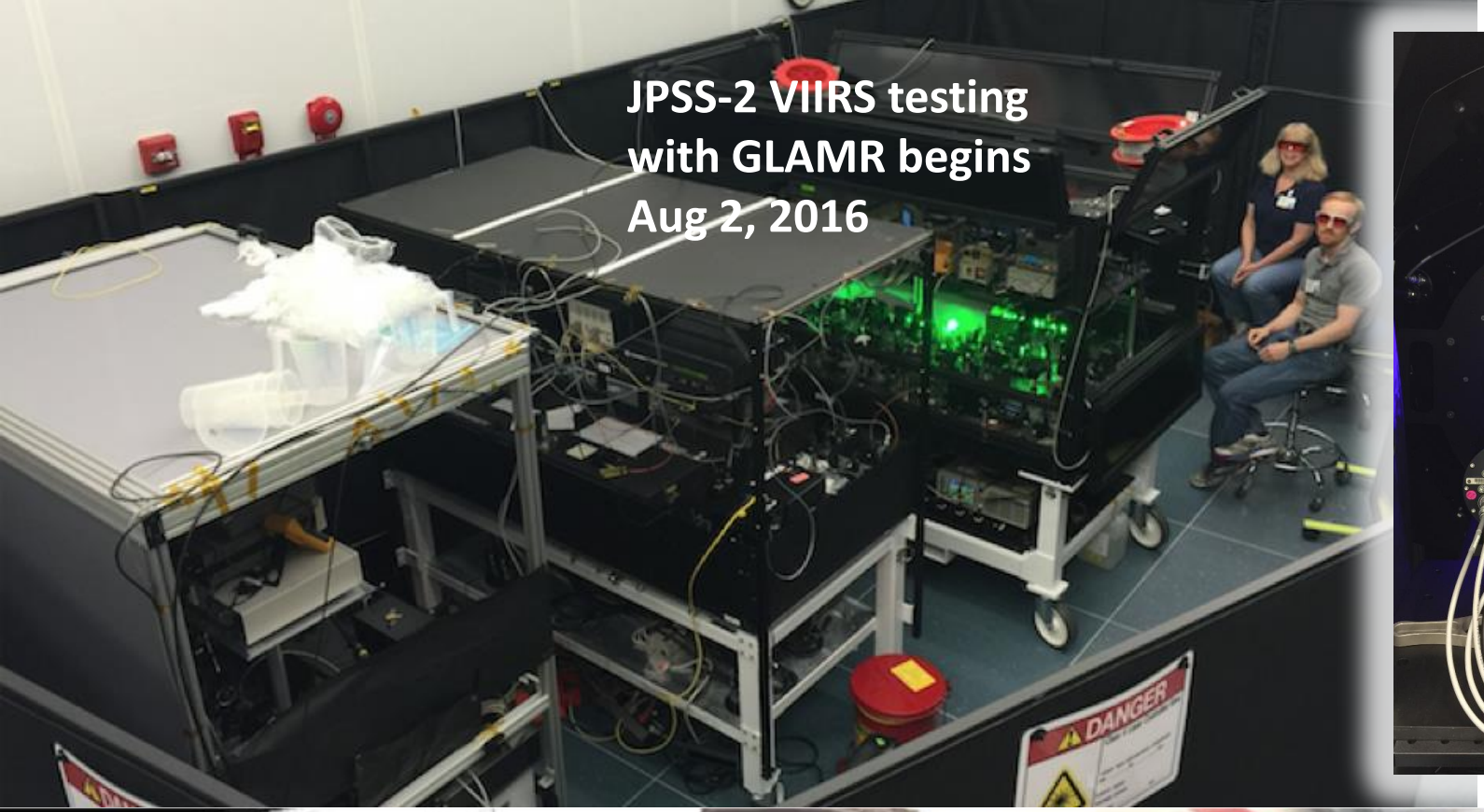

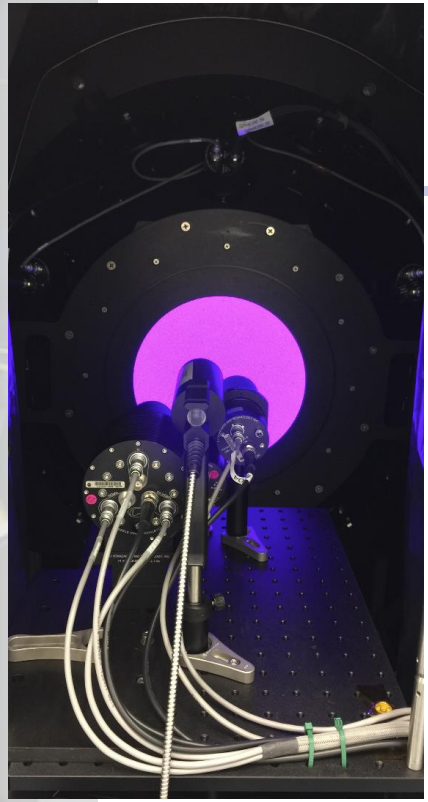

The GLAMR-ous Future

	NIST	NIST-NASA partnership	NASA
2000	Method and traceability development		
••••			
2009	GOES-R, NPP		
2010			
2011			
2012	SAGE III · ISS		
2013		JPSS-1	
2014			
2015			
2016		JPSS-2	
2017			
2018			
2019			
2020			
2021			

G-LiHT
Goddard's Lidar Hyperspectral & Thermal Imager

eMAS-h
Enhanced MODIS Airborne Simulator

RSP
Research Scanning Polarimeter

SOLARIS

JPSS-3,4

PACE

LDCM LANDSAT Data Continuity Mission

CLARREO PATHFINDER

GLAMR will be one of tools that takes these missions to climate accuracies